IMMERGAS

USER'S MANUAL

Magis M6-16 V2

Air-water heat pump

AZ IE MT GB

Instructions and recommendations

Installer
User
Control Panel
Maintenance technician
Technical Data

1.052873ENG

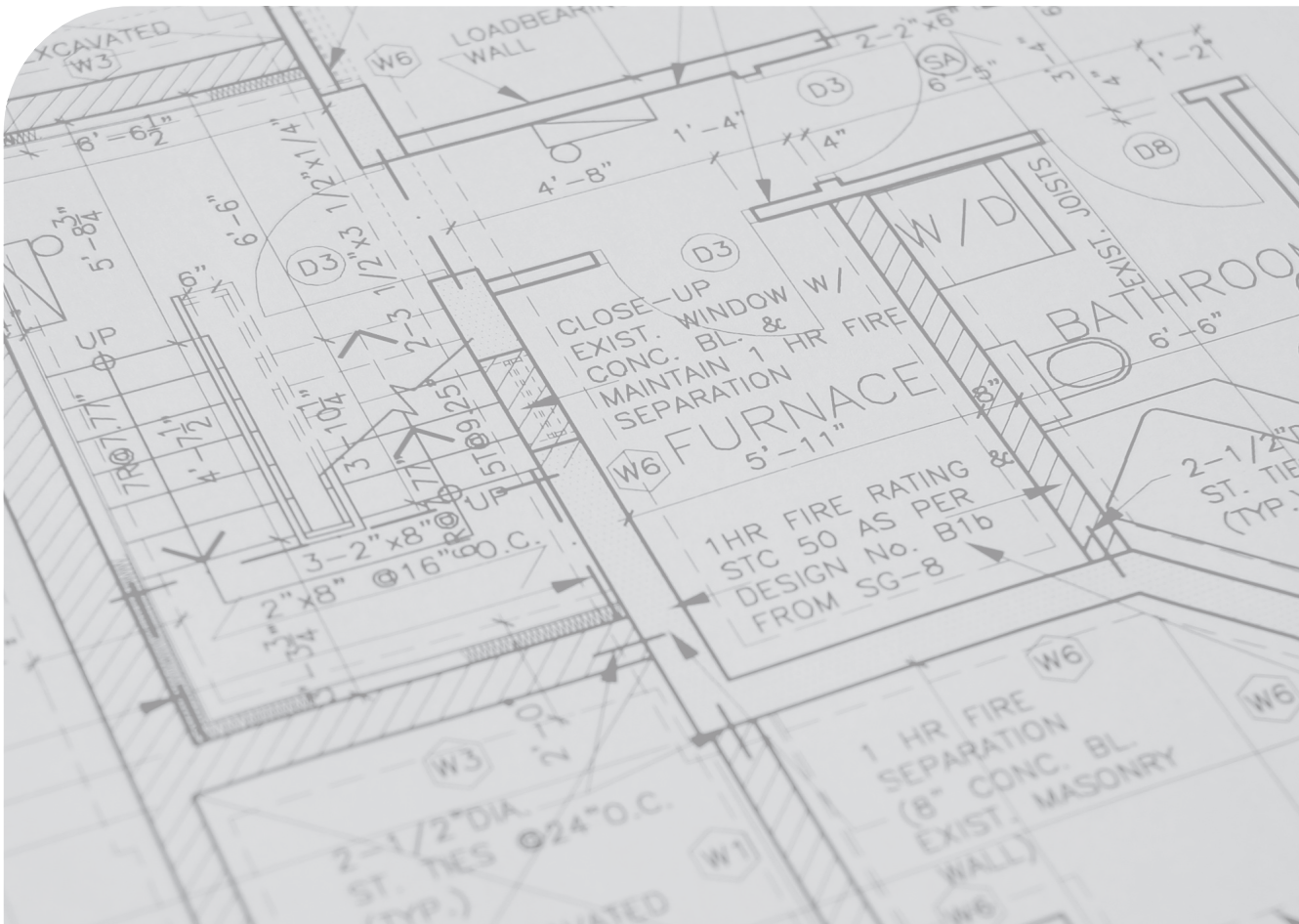

INDEX

Dear Customer 7
List of abbreviations used 8
General Recommendations 9
Safety symbols used 10
Personal protective equipment 10

1 Unit installation 11
1.1 Installation warnings 11
1.2 Product specifications 13
1.2.1 Description of the product. 13
1.2.2 Product range 13
1.2.3 Unpacking the product 14
1.2.4 Accessories 14
1.2.5 Main dimensions 15
1.2.6 Main components 16
1.3 Data plate 17
1.3.1 Data nameplate positioning 17
1.3.2 Key for data nameplate 18
1.4 Handling the appliance 19
1.4.1 Handling with hoist or similar 19
1.4.2 Centre of gravity 20
1.4.3 Parts to remove 20
1.5 Unit installation 21
1.5.1 Introduction 21
1.5.2 Installation requirements. 22
1.5.3 Safety zone 23
1.5.4 Preparing the installation site 27
1.5.5 Selecting the installation position 27
1.5.6 Installation guide near the sea 28
1.5.7 Selection of the installation site in areas with a cold climate 29
1.6 Assembling the unit 30
1.7 Condensate drain installation 31
1.8 Hydraulic connection 34
1.8.1 Hydraulic module 35
1.8.2 System minimum water content. 36
1.8.3 Minimum flow rate 36
1.8.4 Adjusting of the expansion vessel pre-pressure 36
1.8.5 Third-party tank requirements 37
1.8.6 DHW tank thermistor 37
1.8.7 Field connection of hydraulic parts 37
1.8.8 Pipe connection 38
1.8.9 Insulation of external water pipes of the system 39
1.8.10 System filling. 40
1.8.11 System filling water characteristics. 41
1.8.12 Hydraulic circuit check 42
1.9 Electrical connection 43
1.9.1 Access to the electrical panel 43
1.9.2 Electrical connection precautions 44
1.9.3 Electrical wiring guidelines 45
1.9.4 Tightening torque 46
1.9.5 Rear plate layout for wiring 46
1.9.6 Power cable connection 46
1.10 Connection of other components. 49

1.10.1 Wiring of 3-way valves SV1, SV2 and SV3 50
1.10.2 Wiring of additional pumps 53
1.10.3 Alarm or defrost operation wiring 54
1.10.4 Tank electric heater (TBH) wiring 54
1.10.5 External IBH box wiring 55
1.10.6 Room thermostat (RT) wiring 56
1.10.7 Solar energy input signal wiring (low voltage) 58
1.10.8 Remote shutdown wiring 58
1.10.9 Smart Grid wiring 59
1.11 Circulation pump 60
1.12 Operating limits 61
1.13 Additional expansion vessel and water volume. 63
1.14 Kits available on request 64
1.15 Control panel installation 65
1.15.1 Installation materials 65
1.15.2 Control panel main dimensions 65
1.15.3 Control panel wiring 65
1.15.4 Mounting 67
1.16 Cascade installation 68
1.17 Unit installation completion 70
1.18 Typical installation examples 71
1.19 Hydraulic diagrams 75
1.20 Wiring diagrams 77
1.21 Configuration 85
1.21.1 Overview of DIP switch settings. 85
1.21.2 Pre-configuration checks 86
1.21.3 Unit silent mode function 86
1.21.4 Configuration 86
1.22 Implementing 87
1.23 Handover to the customer 88

2 User Instructions 89
2.1 General recommendations 89
2.2 Cleaning and maintenance 91
2.3 Appliance switch-off 91
2.4 Prolonged inactivity 91
2.5 Cleaning the case 91
2.6 Permanent shutdown 91

3 Control panel 92
3.1 User interface 92
3.1.1 Names and functions 92
3.1.2 Interface navigation 93
3.1.3 Interface layout 94
3.2 Interface map 100
3.2.1 User menu interface 100
3.2.2 Service menu interface 101
3.3 Basic operation 102
3.3.1 Screen lock/unlock 102
3.3.2 Switching the unit on/off 102
3.3.3 Temperature settings 102
3.3.4 Changing mode 102
3.4 Other functions and settings 104
3.4.1 Schedule 104
3.4.2 Weather compensation curve settings 109

3.4.3 DHW settings 112
3.4.4 Settings 114
3.4.5 Unit status 117
3.4.6 Error Information 120
3.4.7 FAQ 121
3.5 Anti-freeze protection 122
3.5.1 Protected by software 122
3.5.2 Glycol protection 122
3.5.3 Protection with antifreeze function and antifreeze valves 123
3.5.4 Measure without freeze protection 123
3.5.5 Anti-freeze protection for the water circuit 124
3.5.6 Safety valve, water pump failure 124
3.6 Support 125
3.6.1 Configuration 125
3.6.1.1 DHW setting 126
3.6.1.2 Cooling setting 126
3.6.1.3 Heating setting 126
3.6.1.4 Auto mode setting 126
3.6.1.5 Temperature type setting 127
3.6.1.6 Room thermostat setting 127
3.6.1.7 Additional heat source 128
3.6.1.8 After-sales service 128
3.6.1.9 Reset to factory settings 129
3.6.1.10 Test run 129
3.6.1.11 Special function 129
3.6.1.12 Automatic restart 130
3.6.1.13 Power input limitation 131
3.6.1.14 Input definition 131
3.6.1.15 Cascade setting 132
3.6.1.16 HMI address setting 132
3.6.1.17 Common setting 133
3.6.2 Additional operating reference 133
3.6.2.1 Mode 133
3.6.2.2 Schedule 133
3.6.2.3 Weather compensation curve setting 134
3.6.2.4 DHW settings 138
3.6.2.5 Options 139
3.6.2.6 Unit status 139
3.6.2.7 Error Information 139
3.6.2.8 Frequently Asked Questions (FAQ) 139
3.6.3 Implementing 140
3.6.3.1 Actuator operational test 140
3.6.3.2 Air purging 141
3.6.3.3 Operation test 141
3.6.3.4 Minimum flow rate check 141
3.6.4 Energy-saving tips 142
3.7 Troubleshooting 143
3.7.1 General guidelines 143
3.7.2 Typical faults 143
3.8 Fault and anomaly signals 146
3.8.1 Hydraulic circuit faults 146
3.8.2 Communication faults 146
3.8.3 Sensor faults 147
3.8.4 Electrical voltage faults 148

3.8.5 Protection codes 148
3.8.6 Inverter module faults/protections 149
3.8.7 Others 150
3.9 Operation parameters 151
3.9.1 DHW setting 151
3.9.2 Cooling setting 152
3.9.3 Heating setting 152
3.9.4 AUTO mode setting 153
3.9.5 Temperature type setting 153
3.9.6 Room thermostat setting 153
3.9.7 Additional heat source 154
3.9.8 Floor pre-heating 155
3.9.9 Automatic restart 155
3.9.10 Consumption limitation 156
3.9.11 Input definition 156
3.9.12 Cascade setting 157
3.9.13 HMI address setting 157
3.9.14 Common setting 157
3.9.15 Smart function setting. 157
3.10 User settings parameters 158
3.10.1 Mode and temperature 158
3.10.2 Schedule 159
3.10.3 Weather temperature settings 164
3.10.4 DHW settings 166
3.10.5 Settings 167
3.11 Compliance 169

4 Maintenance and service. 170
4.1 Maintenance Warnings 170
4.2 Maintenance 175

5 Technical data 176
5.1 General product data (single-phase) 176
5.1.1 Power and sound pressure data (single-phase) 177
5.2 General product data (three-phase) 178
5.2.1 Power and sound pressure data (three-phase) 179
5.3 product operating temperatures (single-phase) 180
5.4 Product operating temperatures (three-phase) 180
5.5 Nominal heating performance (single-phase) 181
5.6 Nominal cooling performance (single-phase) 181
5.7 Nominal heating performance (three-phase) 182
5.8 Nominal cooling performance (three-phase) 182
5.9 Product fiche Magis M6 V2 (in compliance with Regulation 811/2013) 183
5.10 Table 2 regulation 813/2013 (Magis M6 V2) 184
5.11 Product fiche Magis M8 V2 (in compliance with Regulation 811/2013) 185
5.12 Table 2 regulation 813/2013 (Magis M8 V2) 186
5.13 Product fiche Magis M10 V2 (in compliance with Regulation 811/2013) 187
5.14 Table 2 regulation 813/2013 (Magis M10 V2) 188
5.15 Product fiche Magis M12 V2 (in compliance with Regulation 811/2013) 189
5.16 Table 2 regulation 813/2013 (Magis M12 V2) 190
5.17 Product fiche Magis M12 T V2 (in compliance with regulation 811/2013) 191
5.18 Table 2 regulation 813/2013 (Magis M12 T V2) 192
5.19 Product fiche Magis M16 V2 (in compliance with regulation 811/2013) 193
5.20 Table 2 regulation 813/2013 (Magis M16 V2) 194
5.21 Product data sheet Magis M16 T V2 (in accordance with Regulation 811/2013) 195

5.22 Table 2 of Regulation 813/2013 (Magis M16 T V2) 196
5.23 Parameters for filling in the package fiche 197

Dear Customer

Congratulations for having chosen a top-quality Immergas product, able to assure well-being and safety for a long period of time. As an Immergas customer you can also count on a Qualified Authorised After-Sales Technical Assistance Centre, prepared and updated to guarantee the constant efficiency of your products. Read the following pages carefully: you will be able to draw useful tips on the proper use of the device, compliance with which will confirm your satisfaction with the Immergas product.
For assistance and routine maintenance, contact Authorised Technical Service Centres: they have original spare parts and are specifically trained directly by the manufacturer.
Thermal systems must undergo periodic maintenance and scheduled checks of the energy efficiency in compliance with national, regional or local provisions in force.
Thermal systems must undergo periodic maintenance and scheduled checks of the energy efficiency in compliance with national, regional or local provisions in force. In order to fulfil the obligations set forth by the Law, we urge you to contact the Authorised Technical Assistance Centres, which will illustrate to you the advantages of the Formula Comfort operation.

The company **IMMERGAS S.p.A.**, with registered office in via Cisa Ligure 95 42041 Brescello (RE), declares that the design, manufacturing and after-sales assistance processes comply with the requirements of standard **UNI EN ISO 9001:2015**.
For further details on the product CE marking, request a copy of the Declaration of Conformity from the manufacturer, specifying the appliance model and the language of the country.

The manufacturer declines all liability due to printing or transcription errors, reserving the right to make any modifications to its technical and commercial documents without forewarning.

Correct disposal of the product (electrical and electronic waste) (Applicable in countries with separate waste collection systems)



The symbol on the product, on the accessories or on the documentation (a crossed-out wheeled waste bin with a black stripe below) indicates that the product and relative electronic accessories must not be disposed of with unsorted municipal waste at the end of its life cycle but must be collected separately to allow for reuse, recycling and other forms of recovery in compliance with standards in force. In fact waste electric and electronic equipment may contain harmful and hazardous substances which, if not managed properly, pose a hazard for the environment and human health.
At the end of its service life, the appliance must not be disposed of like normal household waste nor released in the environment but must be removed by a professionally authorised company as required by current legislation and handed over to authorised collection systems according to local standards.

LIST OF ABBREVIATIONS USED

The following is the key of the abbreviations used in this document.

ACS	Domestic hot water
CO_2	Carbon dioxide
CVC	Fan coil
DHW	Domestic hot water
etc.	Etc.
FCU	Fan coil
Fig.	Figure
FHL	Floor heating circuit
MFA	Maximum fuse amp.
MOP	Maximum overcurrent protection
Max.	Maximum
Min.	Minimum
Nom.	Rated
Par.	Paragraph
RAD	Radiator
Ta	Room temperature
TBH	DHW storage tank backup heater
IBH	Indoor unit backup heater
PDC	Monobloc heat pump

GENERAL RECOMMENDATIONS

Before carrying out any type of work on the appliance, personnel in charge of installation/maintenance must refer to the information in this manual.
This book contains important information for the:
Installer (section 1, section 3 and section 5);
User (section 2 and section 3);
Maintenance technician (section 3, section 4 and section 5).

- This manual provides a detailed explanation on the precautions to be taken during use.
- Read this manual carefully before using the wall-mounted control unit to guarantee its proper operation.
- After you have read this manual, keep it for future consultation.

- The user must carefully read the instructions in the specific section (section 2).
- The user must limit operations on the appliance only to those explicitly allowed in the specific section.
- The appliance must be installed by qualified and professionally trained personnel.
- The instruction booklet is an integral and essential part of the product and must be given to the new user in the case of transfer or succession of ownership.
- This manual must be stored with care and consulted carefully, as all of the warnings provide important safety indications for installation, use and maintenance stages.
- In compliance with legislation in force, the systems must be designed by qualified professionals. Installation and maintenance must be performed in compliance with the regulations in force, according to the manufacturer's instructions and by professionally qualified staff, intended as staff with specific technical skills in the system sector, as envisioned by the Law.
- Improper installation or assembly of the Immergas appliance and/or components, accessories, kit and devices can cause unexpected problems to people, animals and objects. Read the instructions provided with the product carefully to ensure proper installation.
- This instruction manual provides technical information for installing Immergas products. As for the other issues related to the installation of products (e.g. safety at the workplace, environmental protection, accident prevention), it is necessary to comply with the provisions of the standards in force and the principles of good practice.
- All the Immergas products are protected with suitable transport packaging.
- The material must be stored in a dry place protected from the weather.
- Damaged products must not be installed.
- Maintenance must be carried out by skilled technical staff. For example, the Authorised Service Centre that represents a guarantee of qualifications and professionalism.
- The appliance must only be destined for the use for which it has been expressly declared. Any other use will be considered improper and therefore potentially dangerous.
- If errors occur during installation, operation and maintenance, due to non-compliance with technical laws in force, standards or instructions contained in this booklet (or however supplied by the manufacturer), the manufacturer is excluded from any contractual and extra-contractual liability for any damages and the device warranty is invalidated.
- In the event of malfunctions, faults or incorrect operation, turn the appliance off and contact an authorised company (e.g. the Authorised Technical Assistance Centre, which has specifically trained staff and original spare parts). Do not attempt to modify or repair the appliance alone.
- Any work on the equipment, including disposal, must only be carried out by qualified personnel with a suitable Refrigeration Technician's Licence who are familiar with and operate systems containing HC-type gases (e.g. R290 - Propane).

- For further information regarding legislative and statutory provisions relative to the installation of heat pumps, consult the Immergas site at the following address: www.immergas.com

SAFETY SYMBOLS USED



GENERIC HAZARD
Strictly follow all of the indications next to the pictogram. Failure to follow the indications can generate hazard situations resulting in possible harm to the health of the operator and user in general, and/or property damage.



ELECTRICAL HAZARD
Strictly follow all of the indications next to the pictogram. The symbol indicates the appliance's electrical components or, in this manual, identifies actions that can cause an electrical hazard.



WARNING FOR INSTALLER
Read the instruction booklet carefully before installing the product.



COMBUSTIBLE MATERIAL WARNING
This symbol indicates that the appliance in question uses an A3 highly flammable refrigerant. There is a risk of fire if the refrigerant leaked or was exposed to an external ignition source.



WARNINGS
Strictly follow all of the indications next to the pictogram. Failure to follow the indications can generate hazard situations resulting in possible minor injuries to the health of both the operator and the user in general, and/or slight material damage.



ATTENTION
Read and understand the instructions of the appliance before carrying out any operation, carefully following the instructions given. Failure to observe the instructions may result in malfunction of the unit.



INFORMATION
Indicates useful tips or additional information.



EARTH TERMINAL CONNECTION
The symbol identifies the appliance's earth terminal connection point.



DISPOSAL WARNING
The user must not dispose of the appliance at the end of its service life as municipal waste, but send it to appropriate collection centres.

PERSONAL PROTECTIVE EQUIPMENT



SAFETY GLOVES



EYE PROTECTION



SAFETY FOOTWEAR

1 UNIT INSTALLATION

1.1 INSTALLATION WARNINGS

- All the materials supplied are essential for the safety of the appliance.

- This unit contains an A3 highly flammable refrigerant, R-290. Refrigerant leaks can cause fires and explosions. Make sure to follow the storage, installation and maintenance instructions.

- Disconnect the appliance from the power mains before servicing or accessing its internal components.

- You must read this manual carefully before installing the appliance, after which it must be put in a safe place readily available for consultation by the user.
- For safety purposes, the installer is required to carefully read the entire contents of this manual.

- The user must keep the manual in a safe place and remember to pass it on to any other user who over time may manage the appliance after him/her.
  Using different control systems may damage the HP and invalidate the warranty.
- The manufacturer shall not be held liable for damage resulting from use of the appliance with incompatible units.
- The manufacturer disclaims all liability for damage resulting from changes made without their prior written authorisation and/or electric and/or hydraulic and/or cooling connection errors of the appliance. Failure to follow the instructions herein or using the appliance outside of the "Operating Limits" indicated shall immediately nullify any form of manufacturer's warranty.
- Compliance with all the precautions, warnings and guidelines in this manual is essential to prevent serious damage to the system and personal injury.
- Failure to follow these instructions or the requirements indicated in the operating range (see paragraph 5. "Technical data) set forth in the product specifications will immediately invalidate the warranty.
- The appliance must not be used if any damage or anomaly is noticed, such as the emission of odour or increased noise.

- Always stop the unit by switching off the power supply so as to prevent electric shock (electrocution), fire and injury. Contact the Immergas technical assistance if the unit produces smoke, if the power cable is hot or damaged or if the unit is very noisy.
- Always inspect the unit, electric connections, cooling pipes and protections at regular intervals. All the inspections must only be carried out by qualified personnel.

- Packing materials (staples, nails, plastic bags, polystyrene foam, etc.) constitute a hazard and must be kept out of the reach of children.
- Do not have unauthorised personnel attempt to repair, move, modify or reinstall the unit. These operations can cause damage, electric shocks and fire.
- Do not place liquid containers or other objects on the unit. Never sit or stay on the product.

- All materials used for the packaging of this appliance are recyclable.
- The packaging material must be disposed of in compliance with standards in force.

- Disconnect the appliance from the power mains before servicing or accessing its internal components.
- The power supply line must be made as required by safety standards in force.

- This appliance is not intended to be used by persons (including children younger than 8 years old) with reduced physical, sensory or mental capacities, or without experience and knowledge, unless they have been given instructions by a person in charge of their safety on the safe use of the appliance and of the hazards that it entails. Children must not play with the appliance. The appliance must not be cleaned and serviced by children without the supervision of an adult.

- Make sure not to modify the power cable, to make extensions or connections with several wires.
- Low-quality connections or insulation, or exceeding the current limit, could cause shocks and fire.

- Do not use any means to speed up the defrosting operation or to clean other than those recommended by Immergas.

- Keep in mind that refrigerants are not odourised.

- Determine the installation site taking into account the normative references and the conditions mentioned in this installation, use and maintenance manual.

- The appliance must not be installed and transported resting on one side or upside down as oil could leak from the compressor and enter the cooling circuit thus seriously damaging the appliance.

- Make sure to safely dispose of the material making up the packaging. Packaging material, such as nails and other metal or wooden pallets can cause injuries to persons and animals if disposed of in an unsafe manner.

Reducing the noise level may reduce the power output of the appliance.

1.2 PRODUCT SPECIFICATIONS

1.2.1 Description of the product.

The appliance is used for heating, cooling and DHW systems. The generator can be used in combination with fan coil units, low-temperature radiant hydronic terminals, high-efficiency low-temperature radiators, and DHW tanks.The supplementary electric heater can increase the heating capacity at extremely low outdoor temperatures.It serves as a backup heat source in the event of a heat pump failure or as frost protection for outdoor water pipes in winter.
The Magis M V2 product is hermetically sealed, with integrated circulation pump and expansion vessel.
The Magis M V2 product has the following features:

- Central heating, cooling and domestic hot water production operation (if coupled with an external storage tank).
- R290 refrigerant gas.
- Heating energy class A+++ LT (35 °C), A++ MT (55°C).
- Compressor and Inverter Fans.
- Entire fan coil range.
- Pump, expansion vessel, Y filter, deaerator, safety valve and heating cable as per standard.

1.2.2 Product range

HP		
Frame		
Model name	MAGIS M6 V2	MAGIS M8 V2 MAGIS M10 V2 MAGIS M12 V2 MAGIS M16 V2 MAGIS M12 T V2 MAGIS M16 T V2

1.2.3 Unpacking the product

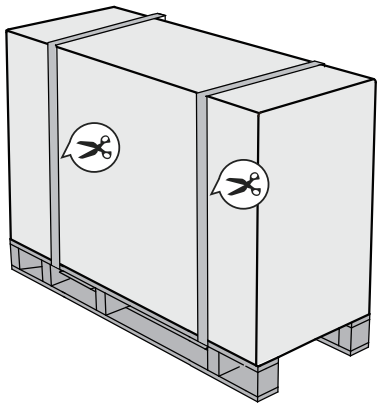
1

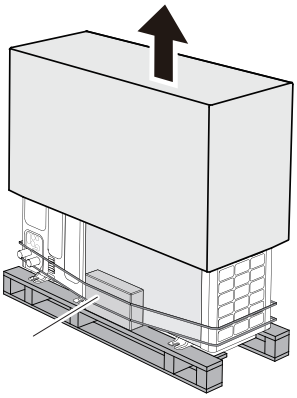

3

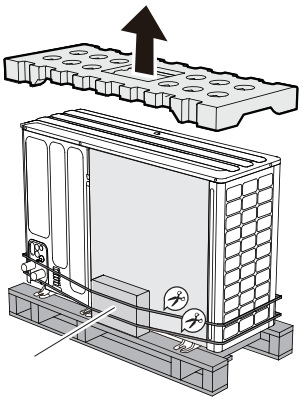

2

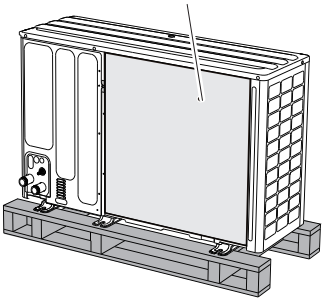

4

1.2.4 Accessories

- The accessories supplied must be kept at hand during installation.
- At the end of the work, the Installation Manual must be handed over to the customer. This must be kept throughout the entire lifetime of the appliance as it is an integral part thereof and must be available to bodies in charge of controlling winter heating and summer air-conditioning systems.

Accessories supplied with the units		
Name	**Shape**	**Quantity**
Use and maintenance manual		1
Wired controller box		1
Cascade coupling resistor		1
Y-filter		1
Thermistor (T5, Tw2 or Tbt)		1

Accessories supplied with the units		
Drain fitting		1
Energy label		1
Clamp		4
Cardboard edge protector		1 (RH) 1 (LH)
Extension cable (T5, Tw2 or Tbt)		1
50k Ohm resistor for DHW request with system manager		1

1.2.5 Main dimensions

The following illustrations refer to 8-16 kW units. The principle is the same for 6 kW units.

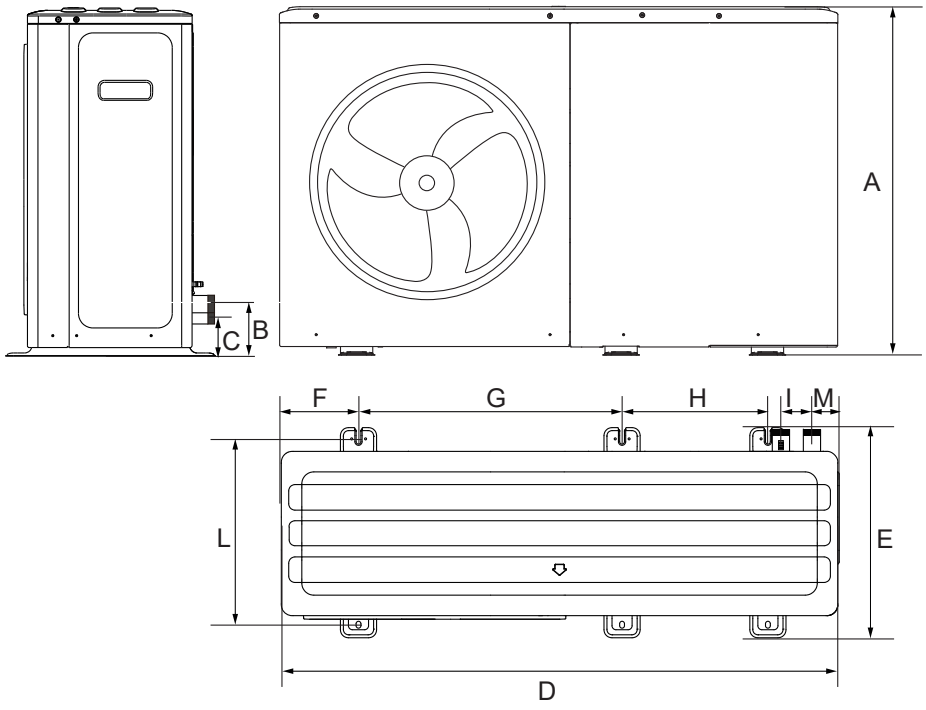

5

Model		A	B	C	D	E	F	G	H	I	L	M
6 kW	(mm)	717	91	91	1299	426	121	644	379	90	375	71
8-16 kW	(mm)	865	129	100	1385	523	192	656	363	77	456	71

1.2.6 Main components

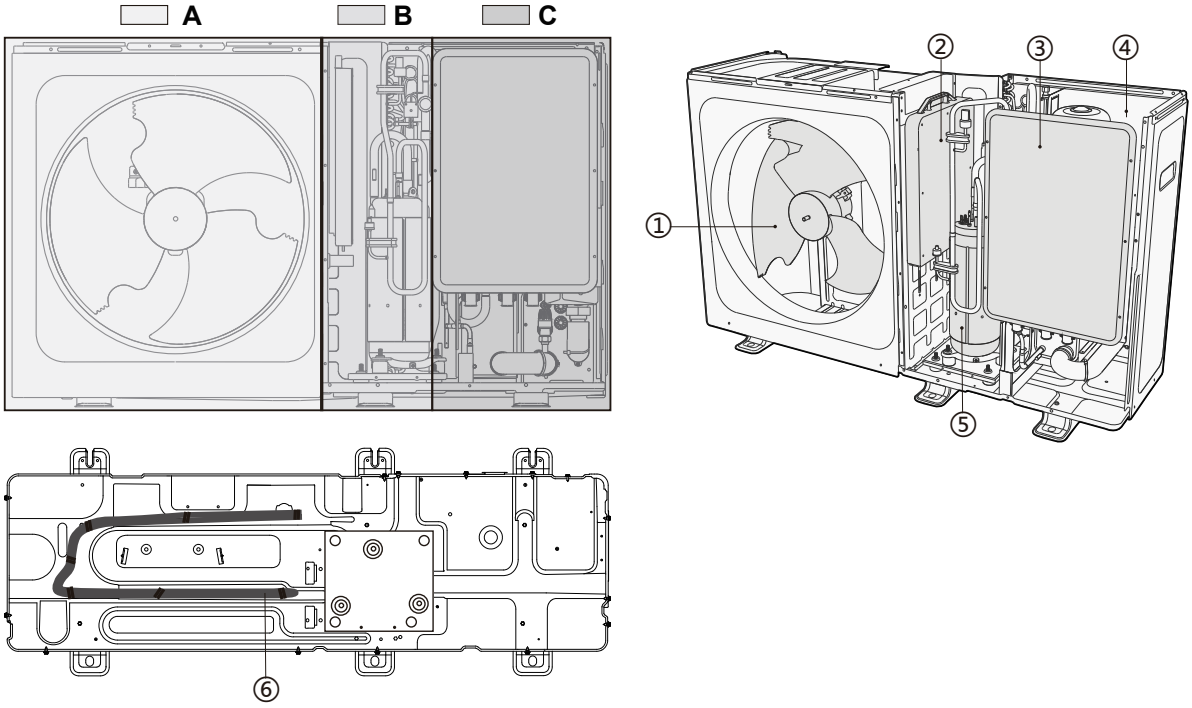

6

Key (Fig. 6):

A	-	*Fan chamber*
B	-	*Hydraulic section*
C	-	*Hydraulic module*
1	-	*Fan*
2	-	*Inverter control box*
3	-	*Main control panel*
4	-	*Hydraulic module*
5	-	*Compressor*
6	-	*Base heater*

1.3 DATA PLATE

1.3.1 Data nameplate positioning

6 kW model

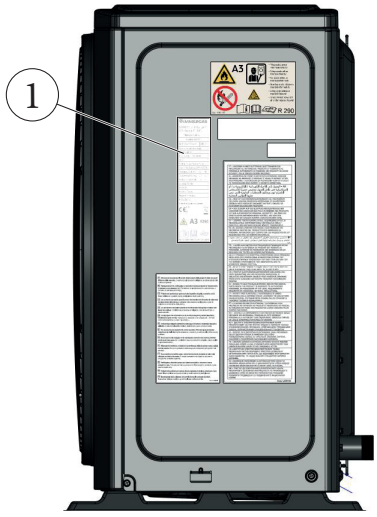

7

8/10/12/16 kW models

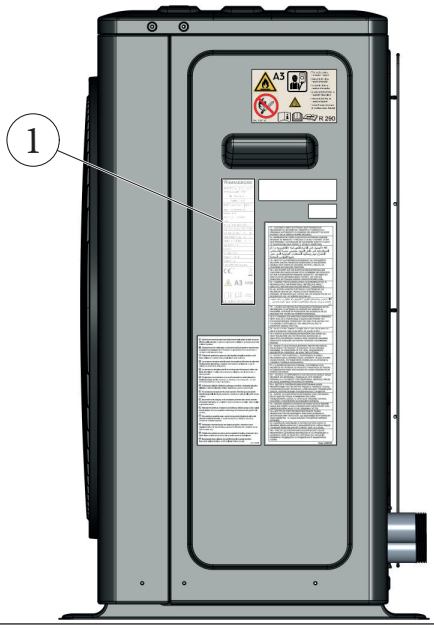

8

Key (Fig. 7; 8):

1 - Data plate

1.3.2 Key for data nameplate

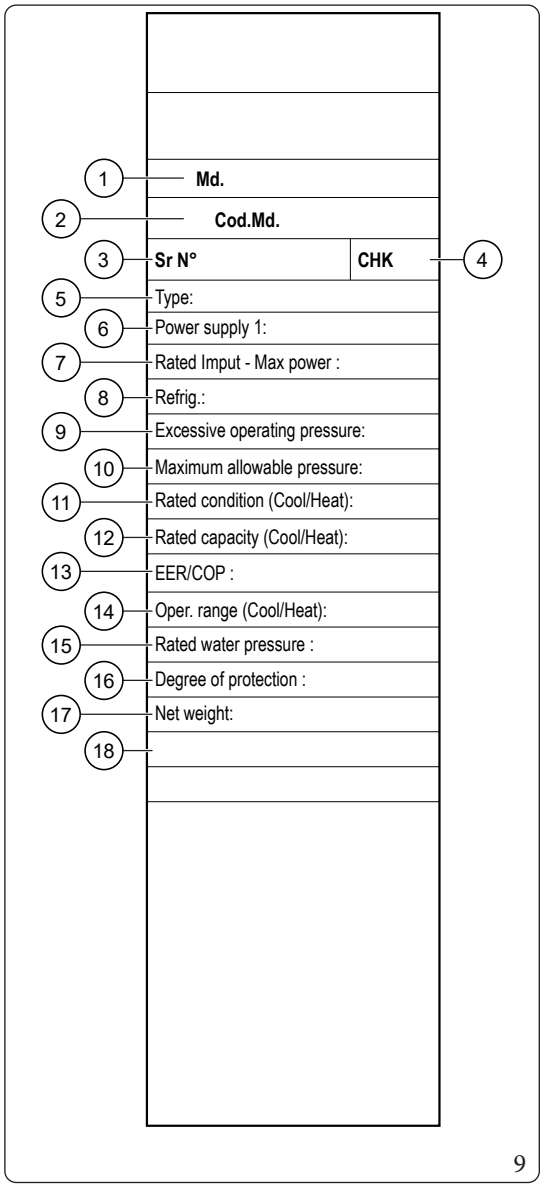

	ENG
1	**Md.** - Model
2	**Cod.Md.** - Model code
3	**Sr N°** - Serial Number
4	**CHK:** Check
5	**Type:** Type
6	**Power supply 1:** Power supply 1 - Rated voltage and frequency
7	**Rated Imput - Max Power:** Power supply - Maximum power
8	**Refrig.:** Coolant
9	**Excessive Operating Pressure:** Excessive operating pressure
10	**Maximum Allowable Pressure:** Maximum allowable pressure
11	**Rated Condition (Cool/Heat):** Rated condition
12	**Rated capacity (Cool/Heat):** Rated capacity (cooling/heating)
13	**EER/COP**
14	**Oper. range (Cool/Heat):** Operating range (cooling/heating)
15	**Rated Water Pressure:** Rated water pressure
16	**Degree of protection:** Protection rating
17	**Net weight:** Net weight
18	Appliance information

The technical data are provided on the data plate on the appliance.

1.4 HANDLING THE APPLIANCE

- Take weight distribution into account during transport. The product is considerably heavier on the compressor side than on the fan motor side (See paragraph 1.4.2 "Centre of gravity").
- Protect the casing sections from damage. Use the angle bracket (Ref. B Fig. 10) to guide the lifting straps when hoisting the unit.
- After transport, remove the transport straps.
- During transport, do not tilt the product at an angle greater than 45°.

- The unit must be checked immediately after delivery (for damage during transport). Any damage must be reported immediately to the dealer of Immergas products. After inspection, the protective enclosure and the crate must be properly reassembled so as to protect the product.
- It is important to protect the product which must therefore be transported in protective packaging so as to be kept covered until final installation.

The surface of the heat exchanger is sharp.

1.4.1 Handling with hoist or similar

- Lift the product with a hoist using approved lifting straps (in compliance with standards in force). Keep the straps long so as not to damage the panels. When lifting with a hoist, always wear personal protective equipment (safety helmet, accident prevention shoes and gloves).
- **Units on pallet:** route the transport straps correctly through the holes on the left and right sides of the pallet.
- **Unit without pallet:** the transport straps can be inserted into the recesses on the frame, which have been specifically designed for this purpose. Place the cardboard edge protectors under the unit when lifting it using this method.

The centre of gravity of the appliance and the hook used for lifting must be aligned vertically to prevent excessive swinging during lifting operations.

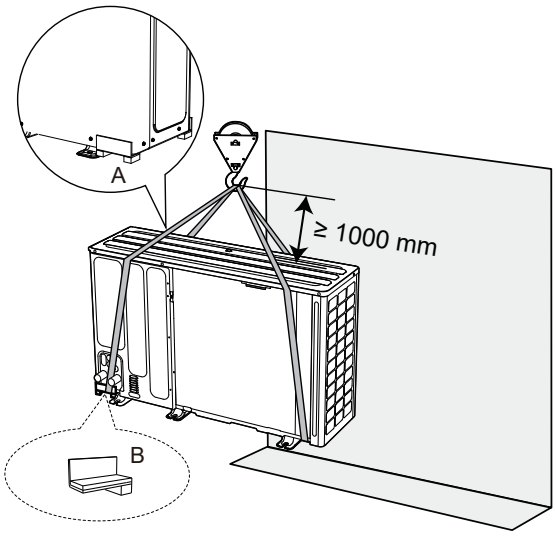

10

Key (Fig. 10):
A/B - Cardboard protector

1.4.2 Centre of gravity

The hook must be positioned vertically above the centre of gravity of the unit to avoid improper tilting.

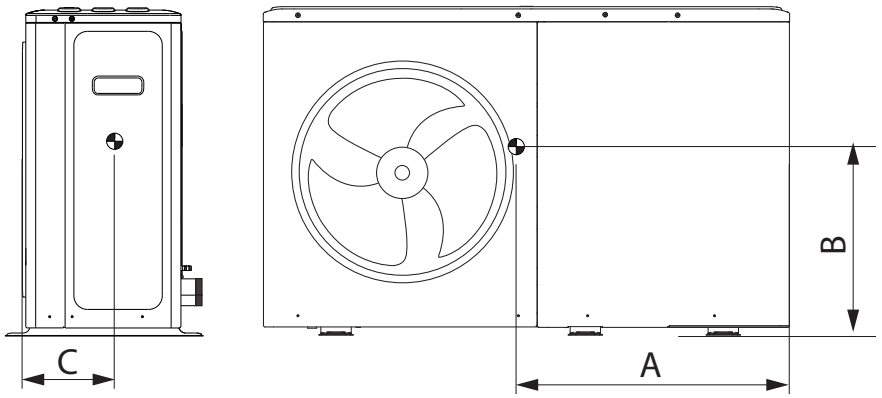

11

Models		A	B	C
6 kW	(mm)	333	528	210
8-10 kW	(mm)	360	550	234
12-16 kW	(mm)	415	715	200

1.4.3 Parts to remove

Once handling operations are complete, the rear protection and the transport supports of the appliance, if present, may be removed.

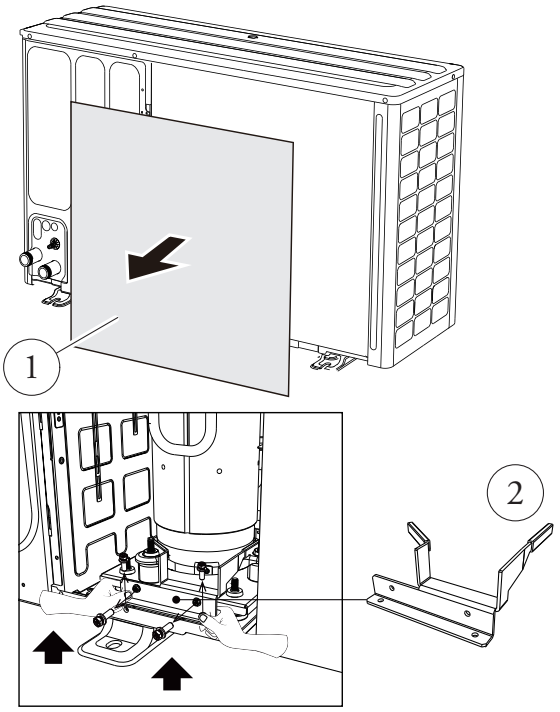

12

Key (Fig. 12):

1 - Rear protection

2 - Transport support (present on 12/16 kW models)

1.5 UNIT INSTALLATION

1.5.1 Introduction

While installing the unit, first connect the water pipes and then the power lines.

- When installation is finished, you must perform an operating test and give the user instructions as to how to operate the air-water heat pump.
- To prevent fires, explosions or injury, the appliance must not be installed in places were there could be hazardous substances or near equipment that could develop flames.
- Do not cut, burn or damage the casing of the appliance or the refrigerant piping.

– Failure to comply with the above can cause fires, explosions, property damage, personal injury or death.

- Installation must be carried out by qualified personnel. It must furthermore be done in compliance with the instructions provided in this manual and with relevant standards in force.
- The products must be installed outdoors in ventilated zones in compliance with relevant standards in force.
- The product is not to be installed in confined or unventilated places.
- The work area must be monitored and inspected before any maintenance activity, it is always to be properly ventilated and treated as if the appliance had leaks. The zone around the work area must be adequately signalled.
- The product and hydraulic system must be installed in a position where there are no corrosive substances.
- The following requirements must be met for installation:
  - Installers must be aware of the contents of this document.
  - Install "No smoking" and "Unauthorised personnel keep out" signs.
  - Do not store flammable materials in the appliance installation area.
  - There must be no ignition sources in the appliance installation area.
  - Appropriate firefighting equipment (CO_2 or dry powder) must be placed appropriately in the vicinity.
  - Any accidental refrigerant leaks which occur during installation must be adequately ventilated and dispersed.
  - The work area must be ventilated appropriately before operating on the refrigerant circuit, braze-welding or handling electric components.

1.5.2 Installation requirements.

- The product must be installed outdoors.
- Make sure to comply with the prescribed "Safety zone" (par. 1.5.3).
- During unpacking, handling and installation of the appliance, operators must wear personal protective equipment such as: hard hat, safety footwear, safety gloves to avoid injury.
- While the appliance is running, do not touch its internal components (hydraulic lines, cooling lines, heat exchangers). If it is nonetheless necessary to touch an internal component, stop the appliance and cut power, wait for it to cool down and still put on safety gloves.
- The HPs must be installed according to the clearance spaces indicated in the installation manual so that both sides are accessible and to allow for repairs and maintenance to be performed. If the HPs are installed without complying with the procedures described in the manual, additional costs could be required since special harnessing, ladders, scaffolds or any other elevation system for repairs are NOT considered covered by the conventional Immergas warranty and are therefore charged to the end customer.
- Make sure that condensate flows properly and without obstacles from the HP to the designated drain point.
- The appliance must be protected against mice, other rodents and any pets (e.g. cats, rabbits, etc.). They could gnaw on cables and other electrical components causing malfunctioning, development of smoke and fire. The user must be recommended to keep the area around the appliance clean and clear of waste.
- Wear "ESD" type protective equipment, namely antistatic, during installation and maintenance operations.
- If installation/repair technicians are not supplied with protective equipment, they could be at the risk of injuries.
- Never install motor equipment near the unit to prevent fires.
- Local, national and European standards and regulations must be complied with.
- It is prohibited to place any type of material on the appliance.
- The appliance is not walkable.
- If the HP is installed in a place exposed to the void (e.g. balcony), make sure that its positioning cannot cause damage to persons, animals or property.

1.5.3 Safety zone

The areas mentioned below relate exclusively to the correct operation of the appliance.

In case of leaks, under no circumstances must the refrigerant be able to penetrate inside a building. In the safety zone of the building that must not be openings such as: windows, doors, skylights, dormer windows, ventilation system air inlet/outlet, etc. Refrigerant R290 is heavier than air and may accumulate at ground level or in the lower part of the installation area. Within the safety zone, there must be no negative pressure conditions that could create hazardous situations due to the accumulation of refrigerant gas.
The safety zone must not extend to buildings or public areas.
The safety zone cannot be modified after installation so as to comply with protection rules.

Independent unit positioning

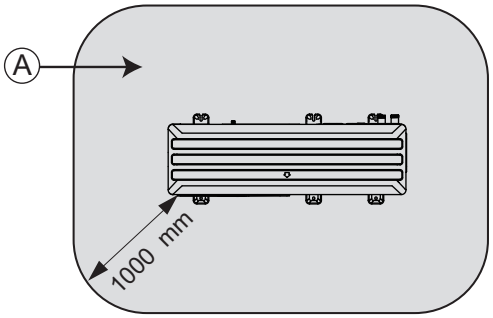

13

Key (Fig. 13; 14; 15):
A - Safety zone

Unit positioning in front of an external wall

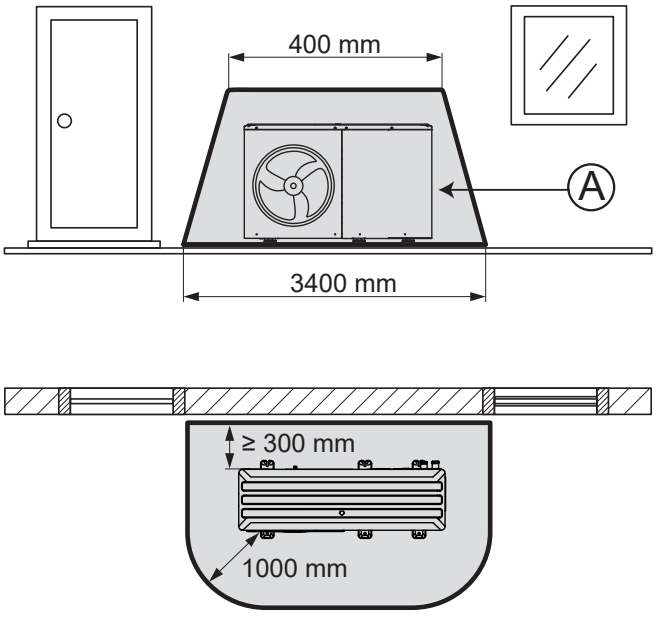

14

Corner positioning of the unit, on the left

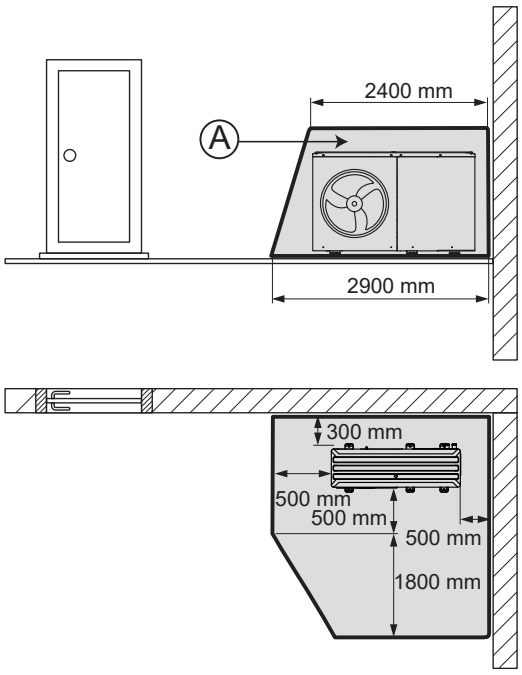

15

For ground installation and flat roof footprint – Single unit

- General

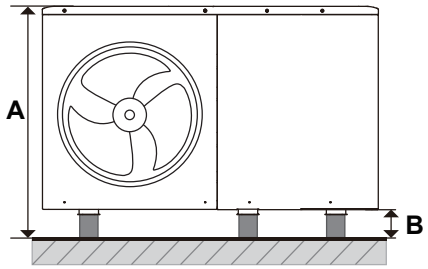

16

- Obstacle on the upper wall

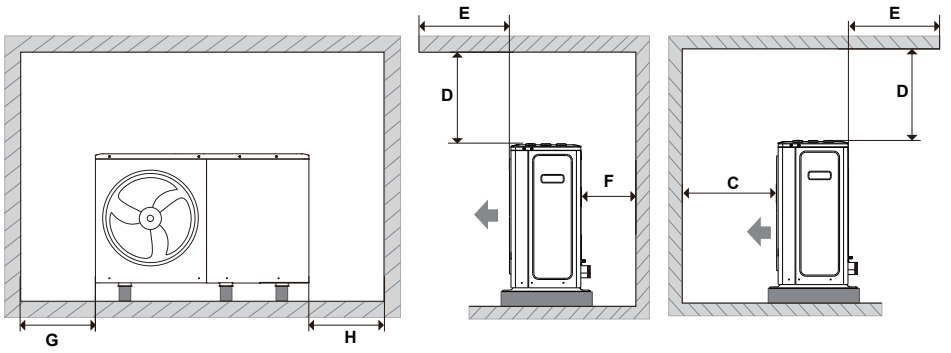

17

- No obstacle on the upper wall

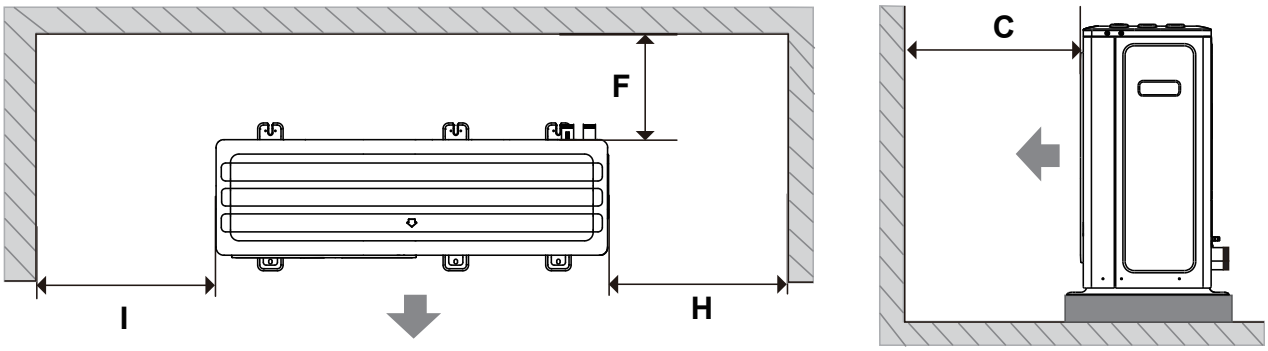

18

Models		A	B	C	D	E	F	G	H	I
6-10 kW	(mm)	Unit height + B	* ≥ 100	≥ 1000	≥ 500	≤ 500	≥ 300	≥ 500	≥ 500	≥ 500
12-16 kW	(mm)	Unit height + B	* ≥ 100	≥ 1500	≥ 500	≤ 500	≥ 300	≥ 500	≥ 500	≥ 500

* In case of antifreeze valve kit installation, the appliance's height from the ground (dimension **B**) must be at least **250 mm** to ensure valve drainage.

Space between units for cascade installation

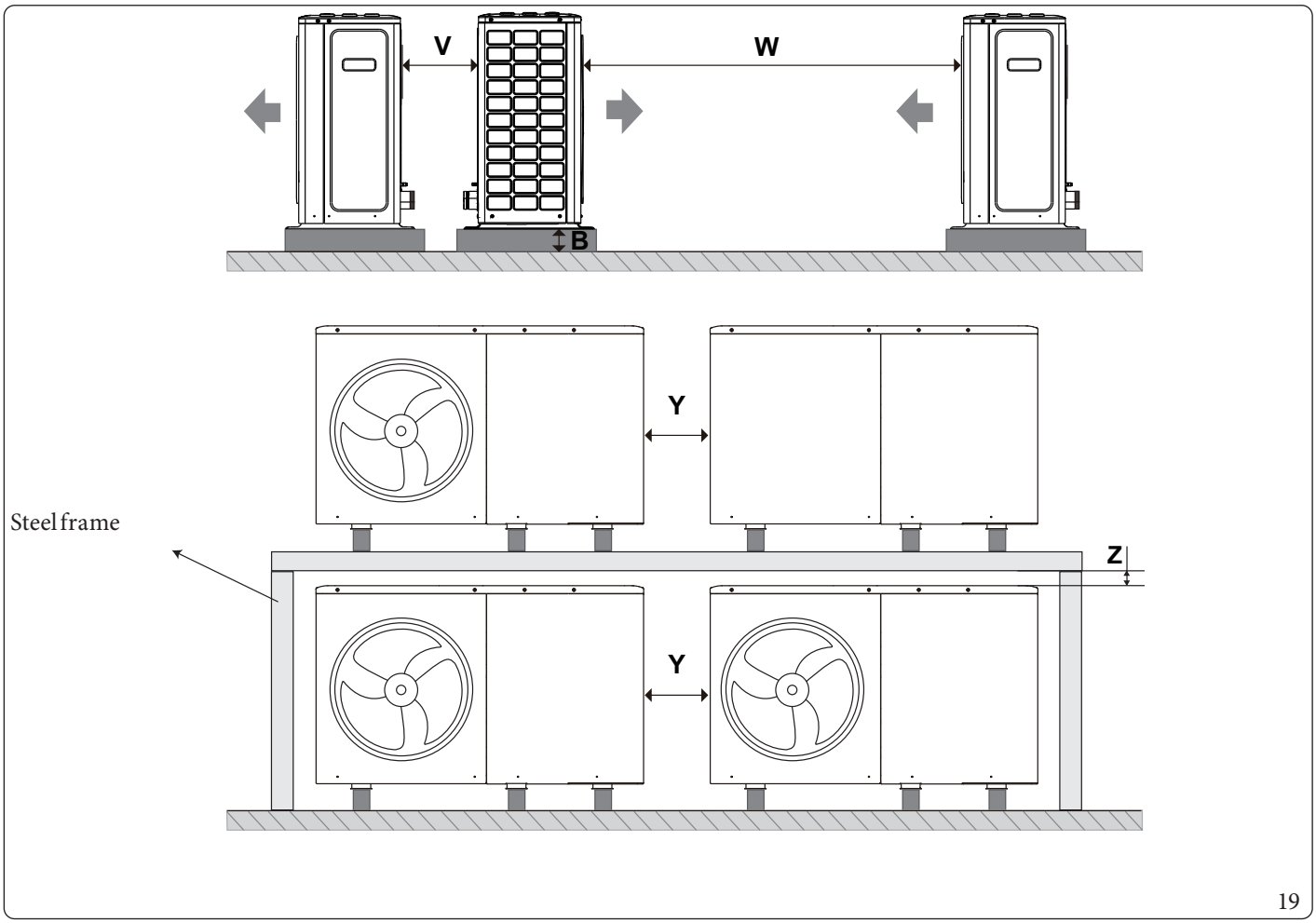

19

Models		V	W	Y	Z
6-10kW	(mm)	≥600	≥2500	≥500	≥200
12-16kW	(mm)	≥600	≥3000	≥500	≥200

For vertically stacked unit installation, a steel frame or equivalent structure must be provided, designed to support the weight of the units intended for installation.

Read the safety precautions before installation.

Install the unit in a place with strong winds

- The HP must be firmly secured so that it can withstand high wind speeds. If the HP cannot be secured to the base on the ground, fix it laterally or use an additional support structure.
- In order to prevent exposure to (strong) wind, install a deflector to protect the unit. (Strong frontal wind can restrict the outward air-flow (C), causing significant performance degradation, risk of fan motor damage and increased frost formation on the finned heat exchanger).
- Install a windbreak barrier, taking into account the prevailing wind direction (complying with the minimum installation clearances described in the preceding paragraphs).

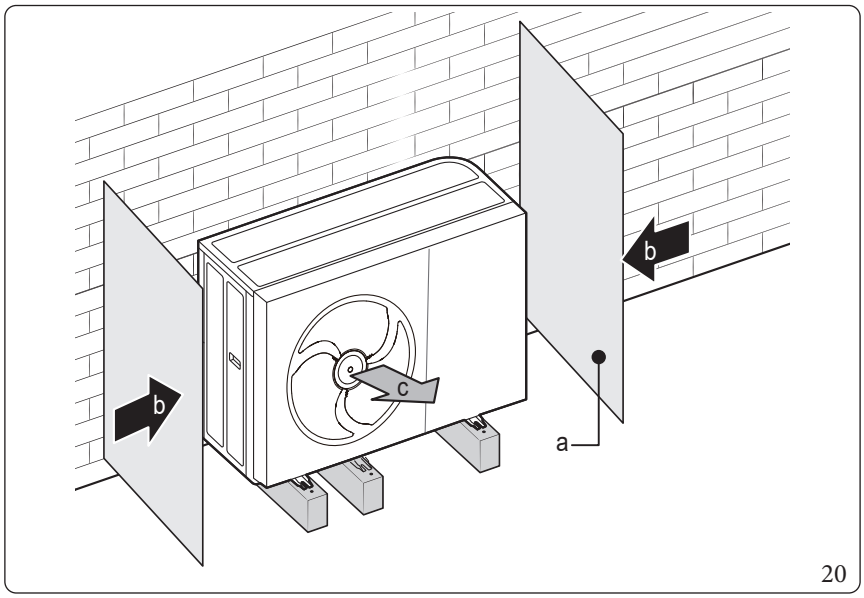

20

Key (Fig. 20):

a	-	*Deflector*
b	-	*Prevailing wind direction*
c	-	*Air outlet*

1.5.4 Preparing the installation site

Choose a sufficient space in advance to transport the unit to the installation site.
Do not choose a place where a lot of dust is generated, such as a construction site.

- The coolant inside the unit is highly flammable A3 (R-290).
- Do not install close to possible ignition sources or near heat sources.

1.5.5 Selecting the installation position

- Read the precautions and requirements in paragraph "1.5.2, Installation requirements."
- The appliance is only designed for outdoor installation and for the room temperatures specified in paragraphs 5.3 and 5.4.

The installation place must be chosen in agreement with the user and taking current standards and following requirements into account.

- The chosen position must be dry and ventilated.
- Air must be able to circulate freely through the appliance.
- The chosen position must allow cables and pipes to be connected easily.
- The support surface must be flat, stable and at least strong enough to bear the weight of the appliance and not such to propagate noise and vibrations to the building structures.
- Position the HP so that there is always sufficient distance from plants or animals, as they could cause it to malfunction.
- The appliance must be sufficiently away from radio and/or stereo equipment as well as computers, etc.
- The HP must be installed in an open space always ventilated.
- Respect the required safety space.

The unit must not be installed in the following places:

- A place where there can be potentially hazardous substances such as: combustible gas, carbon fibre, mineral oil, arsenic acid, flammable dust, solvents or petrol, etc.
- Where there can be corrosive gases such as those exhausted from ventilation pipes or flues. The copper pipe or the connection pipe could undergo corrosion and refrigerant could leak.
- In an area where the appliance may become excessively hot and exceed 43°C during cooling mode operation.
- A place where strong winds can affect the unit; if this is not possible, abide by the requirements set out in point "Install the unit in a place with strong winds" paragraph 1.5.3 "Safety zone".
- Consider sufficient space to avoid problems with exhaust air from the unit being directed towards areas where it could cause a nuisance to people or animals.
- A place where exhaust air could become trapped and recirculate into the unit.
- Where there is not sufficient space for maintenance.
- A place too narrow as it can generate problems and potential damage to the product. This can also cause injuries during installation and maintenance.
- A space with insufficient air exchange, especially when several outdoor units are installed. Obstacles can disturb the airflow and potentially cause recirculation between the exhaust air and the inlet air which could cause malfunctioning.

1.5.6 Installation guide near the sea

Abide by the guidelines below for installation near the sea.

1. Do not install the product in places where it is directly exposed to sea water or sea breeze.
   - Make sure that the product is installed behind a structure (for example a building) that protects it from sea breeze.
   - Even when it is inevitable to install the appliance along the seacoast, make sure it is not exposed directly to the sea breeze by installing a protective barrier.

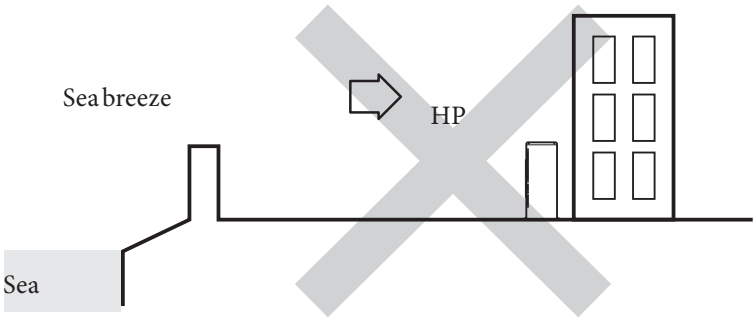

21

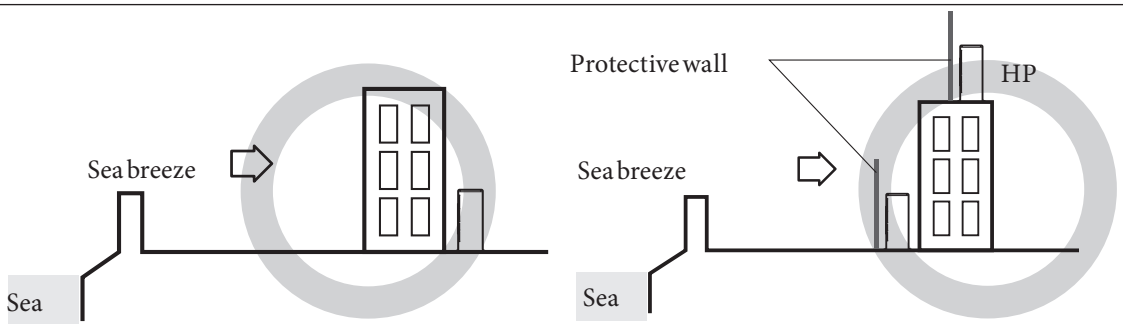

22

   - The protective barrier should be built with strong materials capable of blocking the sea breeze and at least 1.5 times higher and wider than the HP. (To ensure natural ventilation, it is also essential that the barriers respect the minimum distances indicated in paragraph 1.5.3 "Safety zone").
2. Since residual water at the bottom of the HP significantly promotes corrosion, make sure the slope does not affect drainage.
   - Make sure that the floor slope does not cause rain to accumulate.
   - Be careful not to obstruct the drain hole with foreign substances.
3. If the appliance is installed near the sea, clean it regularly with water to remove any attached salinity.
4. Make sure to install the appliance where water can be drained conveniently.
5. If the product is damaged during installation, make sure that it has been repaired.
6. If the product is installed less than 500 m from the shore, special anticorrosion treatment is necessary.

1.5.7 Selection of the installation site in areas with a cold climate

If the appliance must operate with low outdoor temperatures, it is paramount to follow the instructions below.

- Prevent the appliance from being even partially covered with snow.
- Any accumulation of ice could seriously damage the appliance. (E.g: the shore of a lake in a cold area, the seashore, an Alpine region, etc.)
- In an area with intense snowfall, do not install the drain elbow and the exhaust cap on the appliance. This could cause ice to form on the ground. Therefore take appropriate measures to prevent this problem.
- Make sure that the product is positioned at least 150 mm above the max expected snow level.

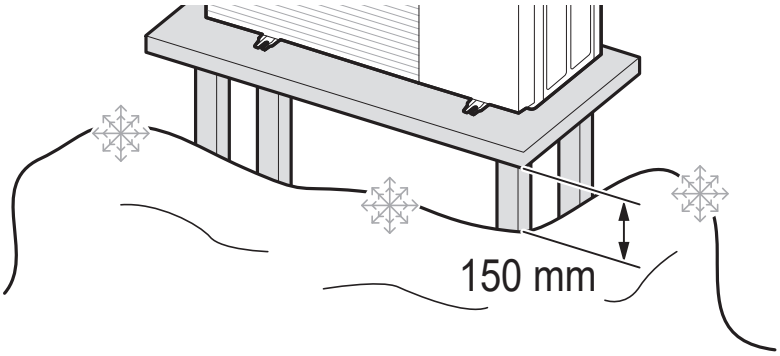

23

Where heavy snowfall is foreseeable, the appliance must be installed so that snow cannot disturb its operation.
If necessary, even the refrigerant/air heat exchanger should be protected against snow (for example by building a sufficiently wide roof to prevent the build-up of snow/hale on the outer casing of the appliance).

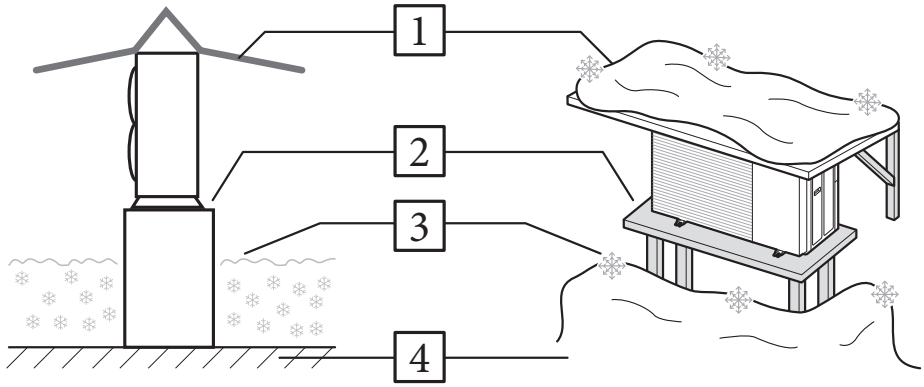

24

Key (Fig. 1 - Snow-proof cover: build a large roof.2 - Structure: build a pedestal.3 - Height of the maximum foreseeable snow precipitation4 - Ground):

1 - Snow-proof cover: build a large roof.
2 - Structure: build a pedestal.
3 - Height of the maximum foreseeable snow precipitation
4 - Ground

1.6 ASSEMBLING THE UNIT

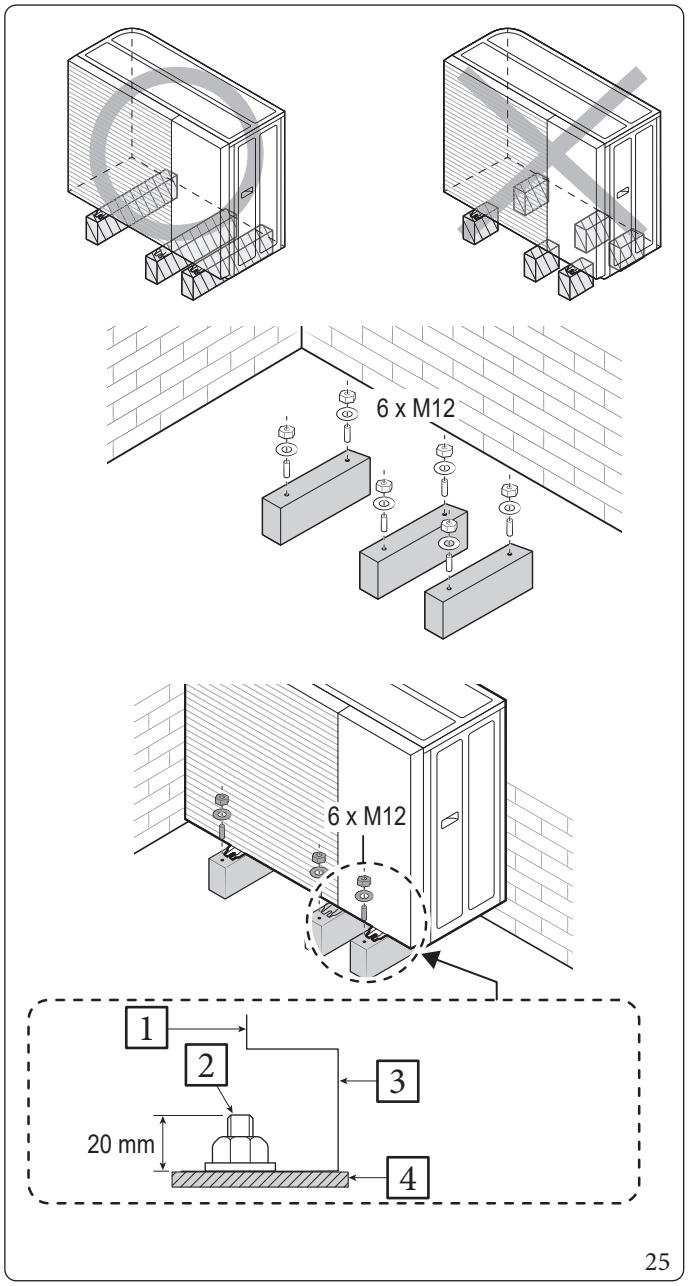

25

The appliance must be installed on a rigid, stable base that does not amplify sound levels and vibration, especially when exposed to strong winds.
When installed with an overhang, it must be secured to a frame capable of bearing its weight and fastened appropriately to the load bearing structure (wall or other).

- Rubber washers must be placed between the feet of the appliance and between lock nuts screwed on the anchoring screws to prevent corrosion.
- If the appliance needs to be is installed on a roof, you must first make sure that it is capable of bearing its weight and that it is waterproof.
- The anchoring screws must protrude at least 20 mm beyond the surface of the base.
- To prevent drain water from freezing, the appliance is supplied as per standard with an additional protection (heater).

Key (Fig. 25):

1 - HP
2 - Anchoring screw
3 - HP support
4 - Base surface

1.7 CONDENSATE DRAIN INSTALLATION

When the appliance works in central heating mode with low outdoor temperatures, ice can form on the outer surface of the finned heat exchanger.
To prevent ice from building up, the system occasionally enters defrost mode and the ice on the surface melts.
The water dripping from the finned heat exchanger is channelled through the drain holes to prevent ice from forming inside the base.

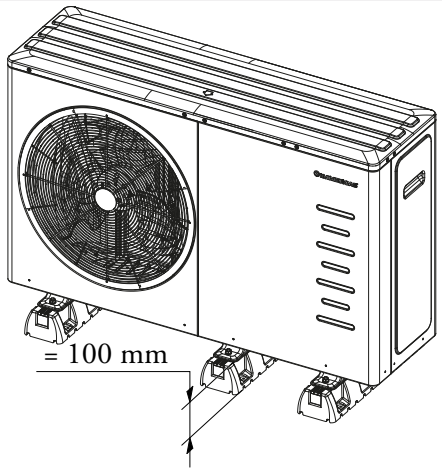

26

- If there is not sufficient space for natural drainage of condensate water from the HP, an additional drainage activity is required. Follow the instructions below.
- Provide a minimum clearance space on the ground of 100 mm.
- Insert the drain fitting in the hole at the bottom of the appliance.
- Connect the drain hose to the attachment of the drain fitting.
- Make sure that filth and debris cannot block drainage (flexible hose). Clean the base plate whenever necessary.
- Make sure that the water coming out of the drain fitting can always flow out safely.

If drainage is inadequate, it can generate stagnant water and ice accumulation, causing performance issues and possible damage.

Position of drain hole (6 kW models)

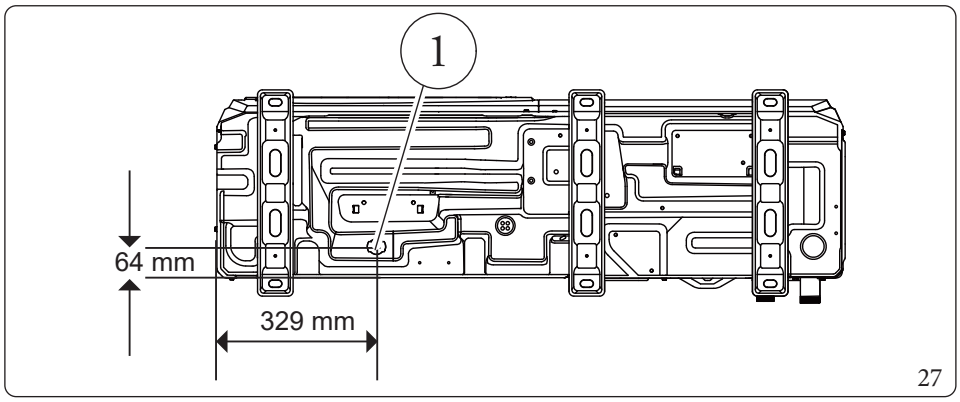

Key (Fig. 27):
1 - Drain hole

Position of drain hole (8/10/12/16 kW models)

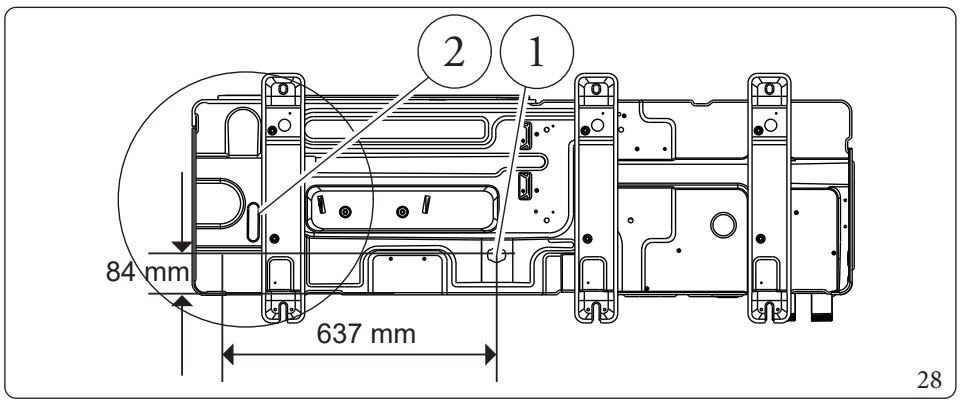

Key (Fig. 28):
1 - Drain hole
2 - Drain hole (normally closed with a plastic plug; to be used if the primary condensate drain hole does not meet drainage requirements)

⚠ Take care regarding condensate when removing the rubber plug from the additional drain hole.

⚠ Ensure that condensate is properly discharged. Collect and channel the condensate that may drip from the base of the unit into a drain tray. Prevent water from dripping onto the floor, creating a slip hazard, particularly in winter.

⚠ For cold climates, it is recommended to install a frost protection system to prevent damage to the unit caused by freezing of the drain water in the event of low drainage flow.

Drain fitting

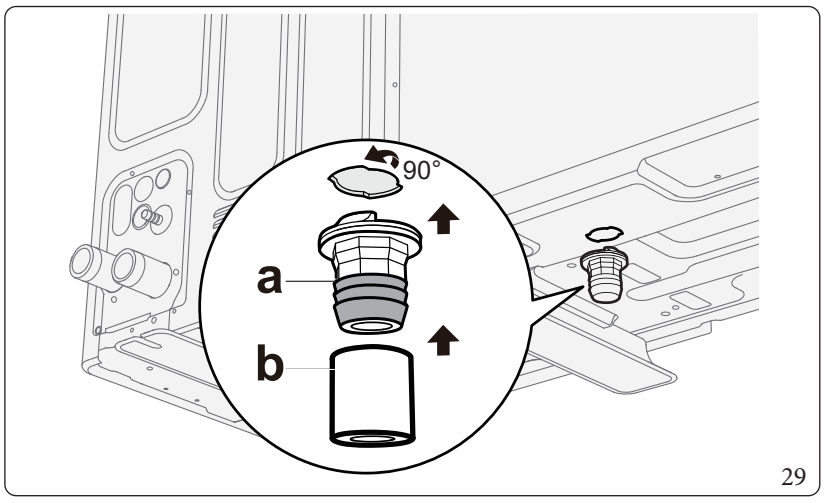

Key (Fig. 29):
a - Drain fitting (plastic, Pagoda connection, 1")
b - Drain hose (not included in the supply)

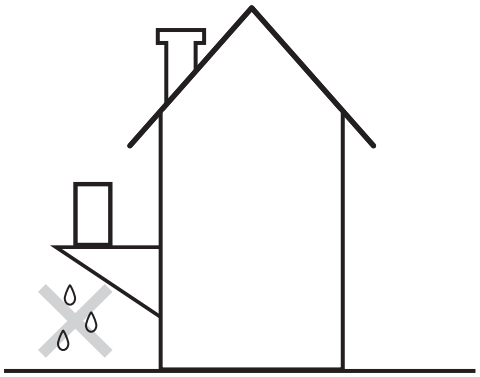

30

1. If the water has difficulty flowing out of the unit, mount the unit on a cement block foundation, etc. (approximately 100 mm (3.93 in) high).
2. If the unit is installed on a frame, assemble a waterproof plate (about 100 mm) on the lower side of the unit to prevent the water from entering from below.
3. When the unit is installed in a place frequently exposed to snow, please pay particular attention to raise the foundation as high as possible (see paragraph 1.5.7 "Selection of the installation site in areas with a cold climate").
4. If the unit is installed on a building structure, please install a waterproof tray (about 100 mm on the bottom side of the unit) so that the drain water does not flow out (see fig. 30):

⚠ Secure the HP properly before connecting the condensate water piping.

1.8 HYDRAULIC CONNECTION

Hydraulic connections must be made in accordance with the general diagram supplied with the unit, respecting the water inlet and outlet. If air, residue or dust gets into the water circuit, problems may occur and for this reason, always take the following into account when connecting the water circuit:

- Use clean pipes only.
- Keep the end of the pipe down while removing burrs.
- When inserting the end of a pipe into a wall, cover it in order to prevent dust and dirt from penetrating.
- Use proper thread sealing tape on connection fittings.The sealing tape must be able to withstand the system's pressures and temperatures.
- Use appropriate tools for connecting the hydraulic circuit. Inappropriate tools may cause damage to the pipework.



- If an additional vent needs to be installed inside the home at the highest point of the system, make sure to use a manual deaerator which must be closed after the system has started.
- Do not install safety valves inside the home; if absolutely necessary, use one with tripping pressure of 3 bar or more.
- Be careful not to deform the unit's pipes by exerting excessive force when connecting them. Deformed pipes may cause the unit to malfunction.
- In order not to damage connections and components, always use a spanner and counter spanner to tighten or loosen water connections.Tighten the connections using a torque spanner in accordance with the torque values given in the table below. Failure to do so may result in leaking.
- The appliance can only be connected to closed circuits.Applying in an open-vessel water circuit would cause malfunctioning, corrosion or leaks in the heat exchangers.

Name	Tightening torque	
BSPP 1" fittings	350~380 kgf•cm	34~37 N•m

1.8.1 Hydraulic module

6 kW model

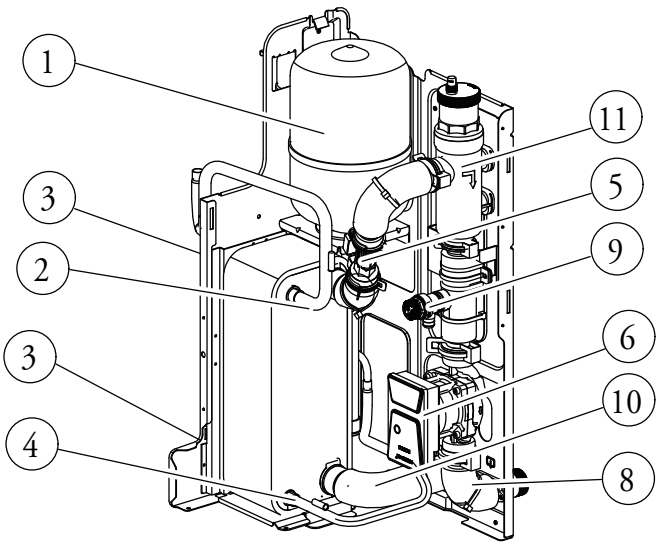

31

8/16 kW models

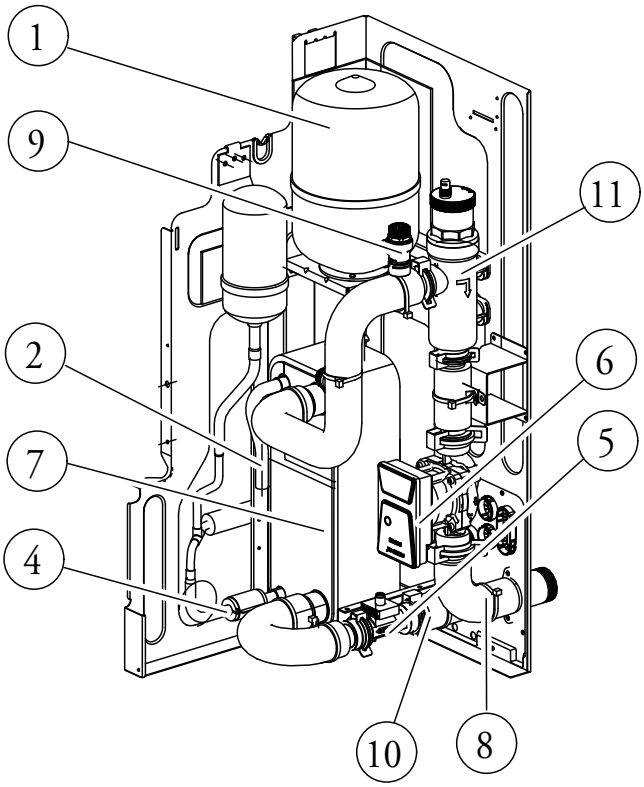

32

Key (Fig. 31; 32):

1 - Expansion vessel(compensates for pressure variations in the hydraulic circuit)
2 - Refrigerant gas pipe
3 - Temperature sensor(four temperature sensors determine the water and refrigerant temperature at various points in the water circuit)
4 - Refrigerant gas pipe
5 - Flow switch(detects the water flow rate in the hydraulic circuit)
6 - Pump(circulates the water in the water circuit)
7 - Plate heat exchanger(transfers the heat of the refrigerant to the water)
8 - Water outlet pipe
9 - Pressure relief valve(prevents excessive water pressure by opening when pressure reaches 0.3 MPa - 3 bar - and discharging water from the hydraulic circuit)
10 - Water inlet pipe
11 - Deaerator(efficiently discharges gases from the hydraulic system, including air, oxygen, refrigerant, etc.)

1.8.2 System minimum water content.

Verify that the total water volume of the system is at least 40 litres, excluding the internal water volume of the unit.

⚠ When the circulation in each heating/cooling circuit is controlled by remotely operated valves, the minimum water volume must be guaranteed even when all valves are closed.

1.8.3 Minimum flow rate

Verify that the minimum system flow rate is ensured under all conditions.This value is required during defrost/backup heater operation.

⚠ When one or more heating circuits are controlled by remotely operated valves, the minimum water flow must be guaranteed even when all valves are closed.
If the minimum flow rate cannot be met, functions E0 and E8 are activated (unit shutdown).

	MAGIS M6 V2	MAGIS M8 V2	MAGIS M10 V2	MAGIS M12/12 T V2	MAGIS M16/16 T V2
Flow rate limits m_3/h (min-max)	0.5 ~ 1.25	0.5 ~ 1.65	0.5 ~ 2.10	0.6 ~ 2.50	0.6 ~ 3.00

The minimum pump outlet flow rate can be set on the wired controller.

⚠ The heat exchanger may be damaged by water freezing due to low water flow rate.
If the water flow is lower than the minimum flow rate, causing freezing and damage to the plate heat exchanger, the manufacturer will not assume the corresponding liability.

1.8.4 Adjusting of the expansion vessel pre-pressure

The unit is fitted with an 8 L expansion vessel with a default pre-pressure of 1.5 bar.Check the pre-pressure every two years.

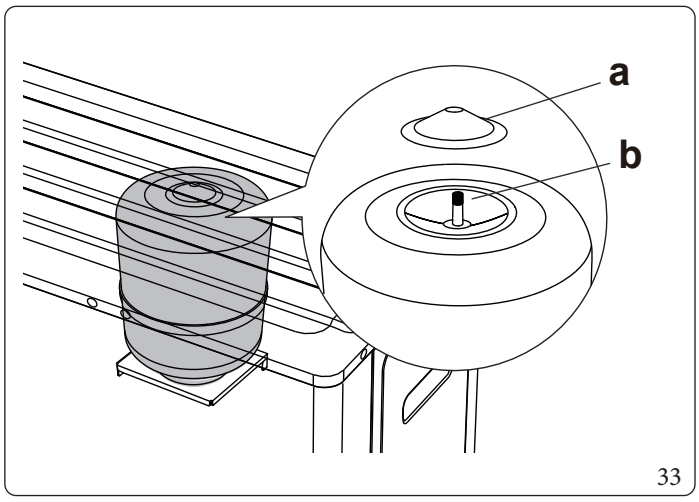

33

Key (Fig. 33):
- *a* - *Upper cover*
- *b* - *Vessel pressure relief valve*

1.8.5 Third-party tank requirements

A third-party tank, if used, must meet the following requirements:

- The tank heat exchanger coil is ≥ 1.05 m², 1.94 m² is recommended.
- The tank temperature sensor must be positioned above the heat exchanger coil.
- The tank electric heater must be positioned above the tank coil.

Performance
Performance data for third-party tanks are not available and performance cannot be guaranteed.
Configuration
The configuration of a third-party tank depends on the size of the tank heat exchange coil.

For installation of the domestic hot water tank ("DHW tank", supplied by the user), refer to the specific DHW tank manual.

1.8.6 DHW tank thermistor

The maximum permitted thermistor cable length is 20 m, which corresponds to the maximum permitted distance between the DHW tank and the unit (only for installation with a DHW tank).The thermistor cable supplied is 10 metres long.

1.8.7 Field connection of hydraulic parts

When a 3-way or 2-way valve is used in the water circuit, the recommended valve switching time is less than 60 seconds.
To optimise the efficiency of the appliance, it is recommended to install the 3-way valve and the DHW tank as close as possible to the appliance.

1.8.8 Pipe connection

In the case of plastic pipes, ensure they are fully oxygen-tight in accordance with DIN 4726.
Oxygen diffusion through pipework may cause excessive corrosion.

The internal pipe must be clean.
Hold the end of the pipe facing downwards when removing the burrs.
Cover the pipe end when inserting the pipe through a wall to prevent dust and dirt from entering the pipe.
Use a suitable thread sealing tape to seal the connections. The sealant must be capable of withstanding the system pressures and temperatures.
When non-copper metal pipes are used, make sure the two materials are insulated from each other to avoid galvanic corrosion.
Copper is a soft material. Use appropriate tools to avoid damage.
Zn-coated parts must not be used.
Always use materials that are compatible with the water used in the system and with the materials used in the unit.
Make sure that the components installed in the hydraulic system pipework can withstand the water pressure and temperature.

Incorrect orientation of the water outlet and inlet may cause appliance malfunctions.
Do not apply excessive force when connecting the field-supplied pipes and ensure they are correctly aligned. Deformation of the water pipes may cause unit malfunctions.
The unit must only be used in a closed circuit.

1. Connect the Y-strainer to the water inlet of the unit and seal the connection with thread sealing tape. (To allow access to the Y-strainer for cleaning, an extension pipe may be connected between the strainer and the water inlet depending on field conditions)
2. Connect the field-supplied pipe to the water outlet of the unit.
3. Connect the safety valve outlet with a hose of appropriate size and length and direct the hose towards the condensate drain, as shown in Fig. 29.

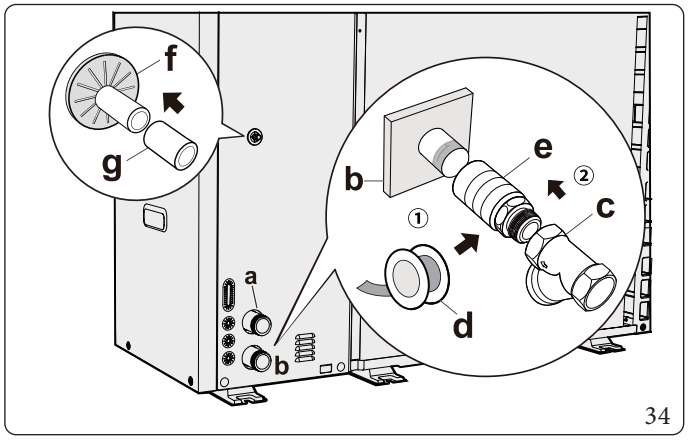

34

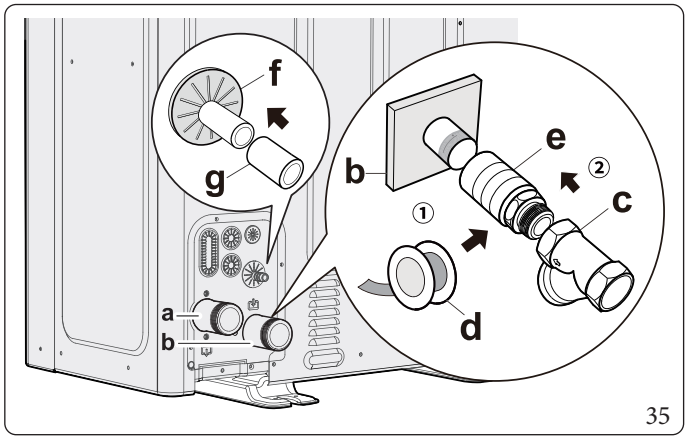

35

Key (Fig. 34;35):

a	-	*Water outlet (1" male threaded connection for 6 kW units and 1 1/4" for 8–16 kW units)*
b	-	*Water inlet (1" male threaded connection for 6 kW units and 1 1/4" for 8–16 kW units)*
c	-	*Y-strainer (supplied with the appliance) (1" female threaded connection for 6 kW units and 1 1/4" for 8–16 kW units)*
d	-	*Thread sealing tape*
e	-	*Extension pipe (recommended, length depending on field conditions)*
f	-	*Safety valve outlet (hose, φ16 mm)*
g	-	*Drain pipe (not included in the supply)*

Installation of the Y-strainer at the water inlet is mandatory. To prevent metallic particles from damaging the unit, it is recommended to install a magnetic filter upstream of the Y-strainer.
Pay attention to the correct flow direction of the Y-strainer. Sediment may damage the plate heat exchanger and, without a filter, refrigerant leaks may occur.
It is recommended to use a filter with a mesh size of 60 or above.

Problems caused by failure to install the filter are not covered by the warranty.

Air vent valves must be installed at the highest points of the system.
Drain valves must be installed at the lowest points of the system.

1.8.9 Insulation of external water pipes of the system

The entire water circuit, including all pipework, must be insulated in order to limit heat losses during cooling operation, reduction of heating and cooling capacity, and freezing of outdoor water pipes in winter.

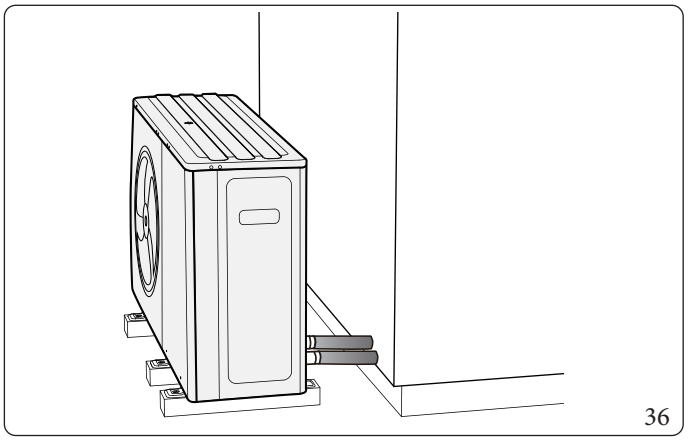
36

The insulation material must have a fire resistance rating of B1 or above and comply with all applicable regulations.
The thermal conductivity of the insulation material must be lower than 0.039 W/mK.

The recommended insulation material thickness is shown below.

Pipe length (m)	Minimum insulation thickness (mm)
< 20	19
20 ~ 30	32
30 ~ 40	40
40 ~ 50	50

If the outdoor temperature is above 30° C and 80% RH respectively, the thickness of the insulation materials shall be at least 20 mm to prevent any condensate build-up on the insulation surface.

1.8.10 System filling.

Before filling the system with water, check the water quality requirements. Pumps and valves may seize due to poor water quality.

- Connect the water feed to the filling valve and open the valve. Comply with applicable regulations.
- Ensure that the automatic air vent is open.
- Ensure a water pressure of approximately 0.2 MPa (2 bar). Remove as much air as possible from the circuit using the deaerator.

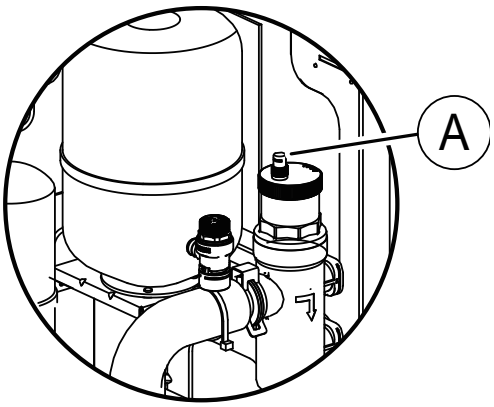

37

Key (Fig. 37):
A - The outlet valve at the top of the deaerator is always open and does not require adjustment.

Maximum water pressure	**0.3 MPa (3 bar)**

During filling, it may not be possible to remove all air present in the system. The remaining air will be removed through the deaerator during the first system operation. A water top-up may subsequently be required.

1.8.11 System filling water characteristics.

- In compliance with local regulations.
- Langelier Index (LI) between 0 and +0.4.
- Within the limits indicated in the table.

Water quality must be verified by qualified personnel.



- Circulators operate correctly only with clean, high-quality tap water.
- Risk of material damage due to poor water quality.
- The most common factors that may affect circulators and the system are oxygen, limescale, sludge, acidity level and other substances (including chlorides and minerals).
- In addition to water quality, installation also plays an important role.The heating system must be airtight.Select materials that are not susceptible to oxygen diffusion (risk of corrosion...).

Water hardness

If the water is hard, install a suitable system to protect the appliance from harmful deposits and scale formation.



If necessary, install a water softener to reduce water hardness.

Water cleanliness

Before connecting the water supply to the unit, thoroughly clean the system using specific products effective at removing residues or impurities that may compromise operation.Existing systems must be free from sludge and contaminants and protected against accumulation.

New systems

In the case of new installations, it is essential to flush the entire system (with the circulator removed) before commissioning the unit.This removes residues from the installation process (welding, swarf, jointing compounds...) and preservatives (including mineral oil).The system must then be filled with clean, high-quality tap water.

Existing systems

If a new boiler or heat pump is being installed on an existing heating system, the system must be flushed to eliminate particles, sludge and scale.
The system must be drained before installing the new unit.Dirt can only be removed with an adequate water flow.Each section must then be flushed separately.
Pay particular attention to "dead legs", where dirt may accumulate due to reduced water flow.The system must then be filled with clean, high-quality tap water.If after flushing the water quality is still inadequate, certain measures must be taken to avoid problems.One option for removing contaminants is the installation of a filter.Several types of filters are available.A mesh filter is designed to capture larger dirt particles.This filter is usually positioned in the section with the highest flow.A fabric filter is designed to capture finer particles.

Water component for copper corrosion limit

Components	Measurement units	Range
PH		7.5-9.0
Ryznar Stability Index (RSI)		< 6.0
Electrical conductivity	µS/cm	100-500
Overall hardness	dH	4.5-8.5
Maximum glycol quantity	%	40
Sulfate ions (SO_4)	ppm	< 50
Alkalinity (HCO_3)	ppm	70-300
Chloride ions (Cl-)	ppm	< 50
Phosphates (PO_4)	ppm	< 2.0
NH_3	ppm	< 0.5
Iron (Fe)	ppm	< 0.3
Manganese (Mn)	ppm	< 0.05
Silice (SiO_2)	ppm	< 30
CO_2	ppm	< 50
Oxygen content	ppm	< 0.1
Sand		< 10 mg/L, maximum diameter from 0.1 to 0.7 mm
Ferrite hydroxide Fe_3O_4 (black)		Dose < 7.5 mg/L, 50% of mass, with diameter < 10 µm
Iron oxide Fe_2O_3 (red)		Dose < 7.5 mg/L, diameter < 1 µm

If a potable water supply is used as the appliance feed, a backflow prevention device must be installed between the potable water source and the appliance.

1.8.12 Hydraulic circuit check

The following conditions must be met before installation:

- The maximum water pressure is less than or equal to 3 bar.
- The maximum water temperature is less than or equal to 75 °C based on the safety device setting.
- Drain valves must be installed at the lowest points of the system to ensure complete drainage of the circuit during maintenance.
- Air vent valves must be installed at the highest points of the system and at easily accessible points for servicing operations. An automatic air vent valve is provided inside the unit. Ensure that the air vent valve is not closed so as to allow automatic air release from the water circuit.

1.9 ELECTRICAL CONNECTION

1.9.1 Access to the electrical panel

To access the unit for installation and maintenance, follow the instructions described in the figures below.

⚠ Risk of electric shock.
Risk of burns.

⚠ The following illustrations are based on 8–16 kW units. The principle is the same for 6 kW units.
Store the screws properly for later use.

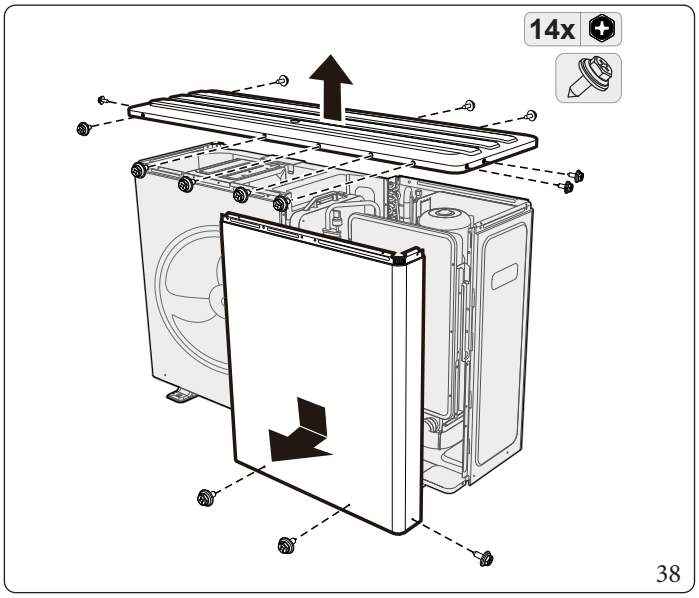

38

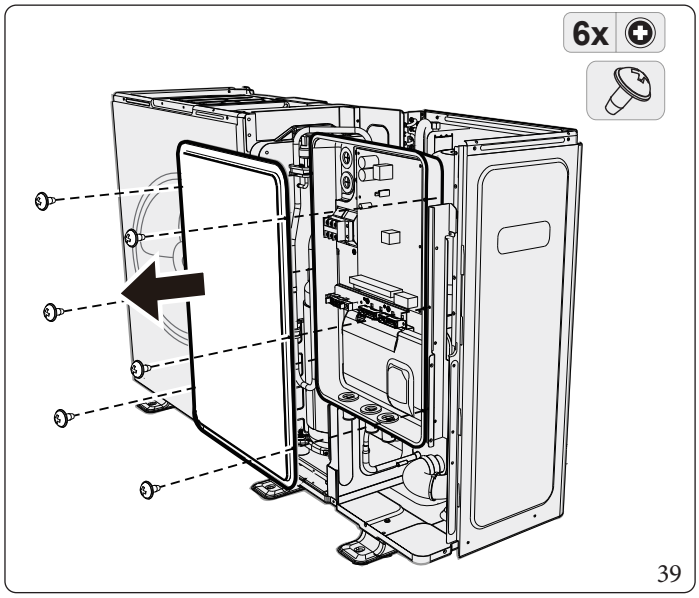

39

1.9.2 Electrical connection precautions

- The appliance must be installed in compliance with national wiring regulations.
- Follow the WIRING DIAGRAM for electrical wiring, located on the rear of the electrical box cover.
- This appliance is equipped with an earth connection for functional purposes only.
- Ensure that the necessary fuses or circuit breakers are installed (type AC is sufficient). A disconnecting device for all poles with a contact separation of at least 3 mm must be connected in the fixed wiring.

It is prohibited to install emergency switches, remote switches for unit shutdown, including switches, contactors and relays, within 2 metres of the unit.

- A main switch or other means of disconnection, with contact separation on all poles, must be incorporated in the fixed wiring in accordance with local laws and regulations.
- Use copper cables only.
- Never bundle cables together and keep them away from pipework and sharp edges.
- Make sure no external pressure is applied to the connectors of the terminals.
- On-field wiring must be carried out according to the wiring diagram supplied with the unit and in compliance with the following instructions.
- Ensure that a dedicated power supply is used, rather than a power supply shared with another appliance.Earth the unit correctly, including the wired controller. Do not connect the unit to a service pipe, surge protection device or telephone earth. Incomplete earthing may cause electric shock.
- To prevent electric shock, a ground fault circuit interrupter (30 mA) must be installed. Use 3-conductor shielded cables.
- Make sure to install the required fuses or circuit breakers.
- A residual current circuit breaker must be installed on the unit power supply.
- Connect an earth leakage safety switch and a fuse to the power supply line.

Power cable and communication cable

- Communication cables must be shielded.
- Use H07RN-F as the power cable.Only the thermistor and wired controller wiring operate at low voltage.
- Power cables and communication cables must be routed separately and must not be placed in the same cable duct.Failure to do so may result in electromagnetic interference.
- Secure the electrical cables with cable ties so that they do not come into contact with pipework, particularly on the high-pressure side.
- The unit is equipped with an inverter.A power factor correction capacitor will reduce the power factor improvement effect and may cause abnormal heating of the capacitor due to high-frequency waves.Installation of a power factor correction capacitor is not permitted.
- The external load current must be less than 0.2 A.If the single load current exceeds 0.2 A, the load must be controlled via an AC contactor.

Earthing

- The appliance must be earthed.
- Any external high-voltage load, if it is metal or a grounded door, must be earthed.
- Ensure that the residual current device is compatible with the inverter (resistant to high-frequency electrical disturbances) to prevent unnecessary tripping of the device.

1.9.3 Electrical wiring guidelines

Field wiring guidelines

- Most field wiring on the unit must be carried out at the terminal block inside the circuit breaker box.To access the terminal block, remove the circuit breaker box service panel.
- Secure all the cables with clamps.
- The backup heater requires a dedicated power supply circuit.
- Installations fitted with a DHW tank (supplied by the user) require a dedicated power supply circuit for the tank electric heater.
- Refer to the DHW Tank Installation and User Manual. Secure the wiring in the order indicated below.
- Arrange the electrical cables so that the front cover does not lift up during wiring operations and firmly fix the front cover.
- Install the cables and firmly secure the cover so that it can be inserted properly.

Operating current and wire cross-section

4. Select the wire cross-section (minimum value) individually for each unit based on the tables below.The rated current in the first table means the MCA in the second table.In cases where the MCA exceeds 63 A, wire cross-sections must be selected in accordance with national wiring regulations.
5. The maximum permitted voltage deviation between phases is 2%.
6. Select circuit breakers with a contact separation of at least 3 mm on all poles for complete disconnection. The MFA is used to select current breakers and residual current circuit breakers.
7. The inverter board is fitted with overcurrent protection (fuse). If additional overcurrent protection is required, refer to the tables below.

(a) Minimum cable cross-section AWG18 (0.75 mm^2)
(b) The thermistor cable is supplied with the unit

Rated current (A)	Rated cross-section area (mm^2)	
	Flexible cables	Cable for fixed wiring
≤ 3	0.5 and 0.75	1 and 2.5
> 3 and ≤ 6	0.75 and 1	1 and 2.5
> 6 and ≤ 10	1 and 1.5	1 and 2.5
> 10 and ≤ 16	1.5 and 2.5	1.5 and 4
> 16 and ≤ 25	2.5 and 4	2.5 and 6
> 25 and ≤ 32	4 and 6	4 and 10
> 32 and ≤ 50	6 and 10	6 and 16
> 50 and ≤ 63	10 and 16	10 and 25

System	Unit				Power supply current			Compressor		OFM	
	Voltage (V)	Hz	Min. (V)	Max. (V)	MCA (A)	TOCA (A)	MFA (A)	MSC (A)	RLA (A)	kW	FLA (A)
6 kW	220-240	50	198	264	13.5	15	16	-	10	0.08	0.32
8 kW	220-240	50	198	264	16	19	20	-	13	0.17	0.8
10 kW	220-240	50	198	264	17.5	19	20	-	13	0.17	0.8
12 kW	220-240	50	198	264	25	31	32	-	18	0.2	0.8
16 kW	220-240	50	198	264	28	31	32	-	18	0.2	1.3
12 kW Three phase	380-415	50	342	456	8.5	11	16	-	18	0.2	0.57
16 kW Three phase	380-415	50	342	456	9.5	11	16	-	18	0.2	1.25

MCA - Minimum circuit ampacity (A)
TOCA - Total overcurrent (A)
MFA - Maximum fuse current (A)
MSC - Maximum starting current (A)
RLA - Rated load amperes (A); the rated compressor input current at maximum frequency (max Hz) when the unit operates in cooling or heating mode
kW - Rated fan motor power
FLA - Full load current

1.9.4 Tightening torque

Wiring	Tightening torque (N•m)
M4 (power supply terminal, control panel terminal)	1.2 ~ 1.5
M4 (earthing)	1.2 ~ 1.5

Excessive tightening may damage the screws.
Tighten the screws with a suitable screwdriver.Using an unsuitable screwdriver could damage the screws and provide incorrect tightening torques.

1.9.5 Rear plate layout for wiring

6 kW model

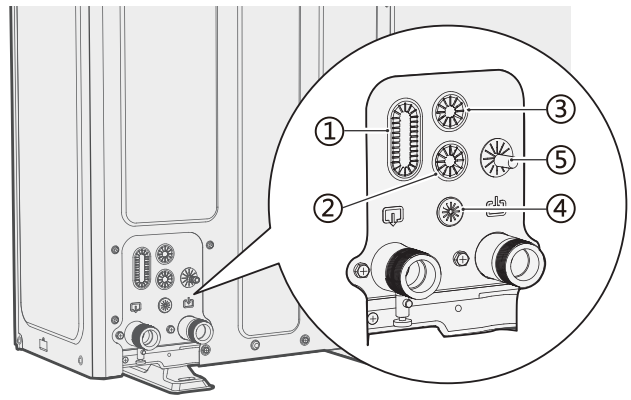

40

8/16 kW model

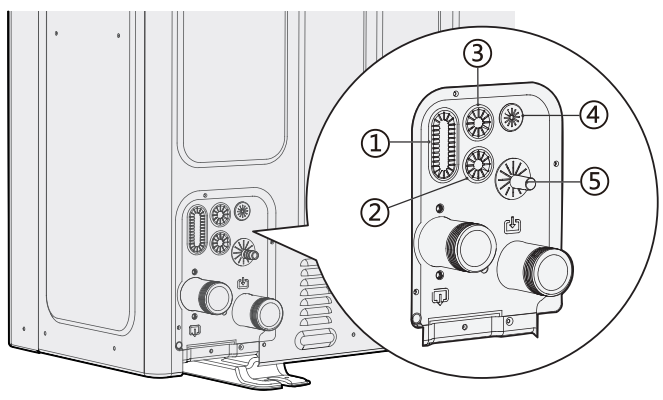

41

Key (Fig. 40;41):

1/2/3 - For high-voltage wiring.
4 - For low-voltage wiring.
5 - Safety valve drain

1.9.6 Power cable connection

Precautions for electric power wiring.

When connecting the power terminal, use the ring cable lug with insulation enclosure (See Figure 42).
Use a power cable compliant with specifications and firmly connect the power cable. Make sure the cable is firmly secured so that it is not yanked off by an outside force.
If it is not possible to use the ring cable lug with insulation enclosure, make sure:

- Not to connect two power cables with different diameters to the same power terminal (causing the wires to overheat due to loose wiring) (See figure 43).

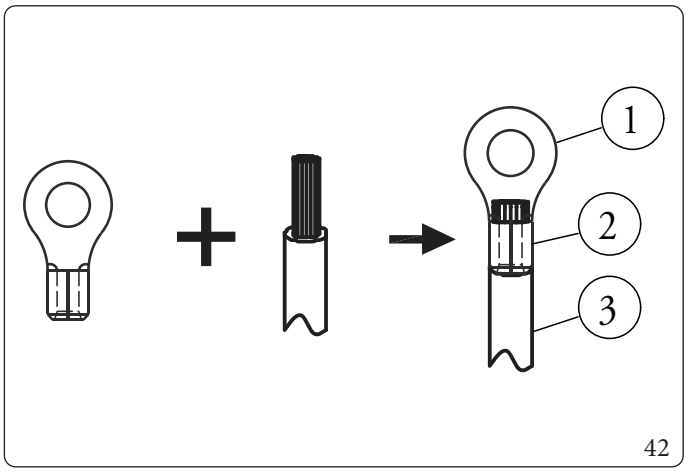

42

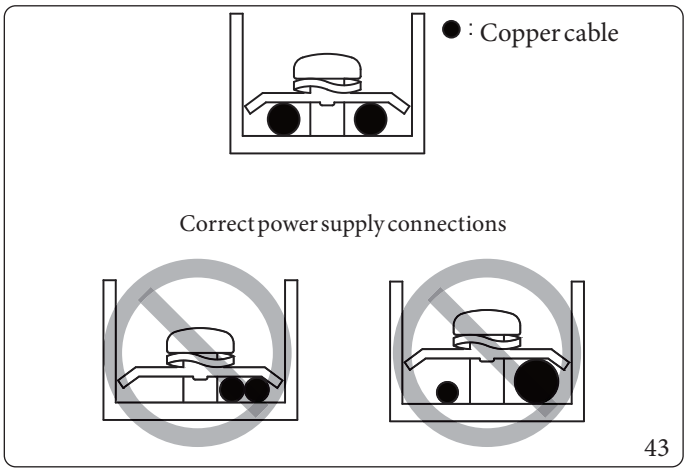

43

Key (Fig. 42):

1 - Ring cable lug
2 - Insulating sheath
3 - Power cable

- Use the correct screwdriver to tighten the terminal screws. Small screwdrivers could damage the screw head and prevent them from being properly tightened.
- Overtightening the terminal screws could damage them.
- Connect an earth leakage circuit breaker and a fuse to the power line.
- In the wiring, make sure that the required wires are used, perform the complete connections and secure the wires so that no external force can affect the terminals.

Connection of power cable of the cascade system.

- Use the same power supply, circuit breaker and protection device for Slave units connected to the same Maser unit.

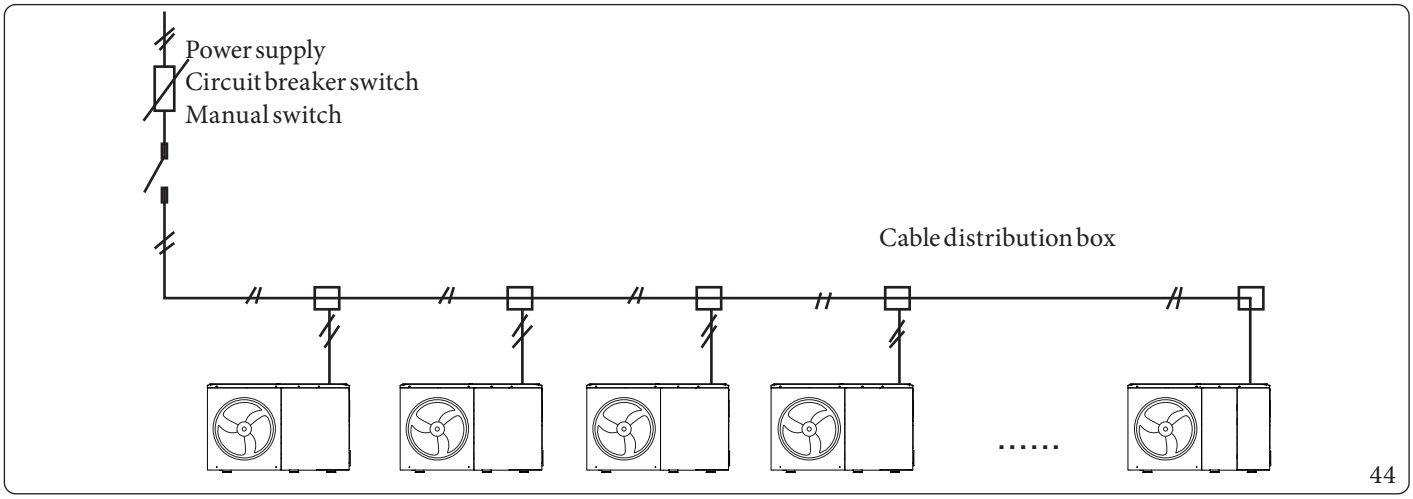

44

Main power supply wiring

- Use a crimp ring terminal for connection to the power supply terminal block.
- The power cable model is H07RN-F.

Single-phase

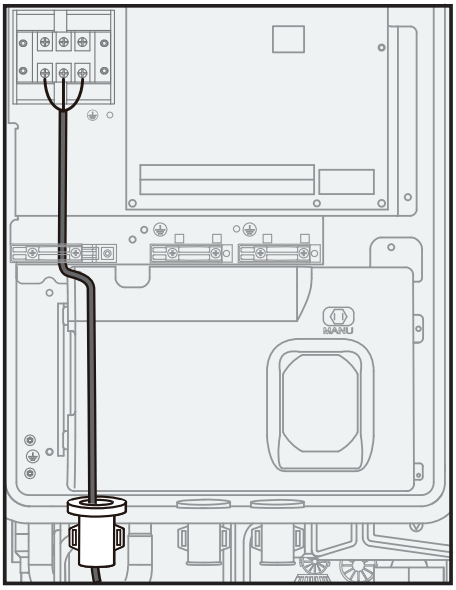

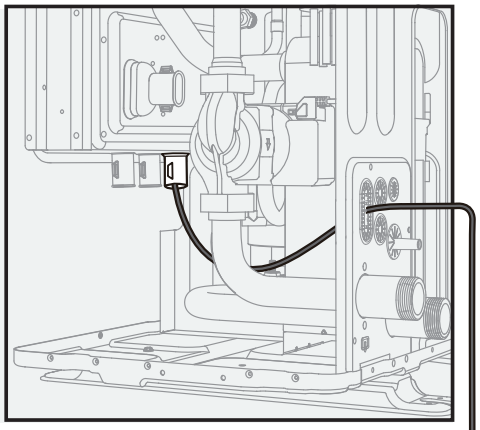

Main power supply

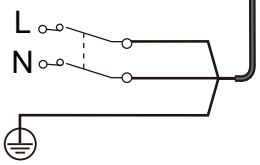

45

Three phase

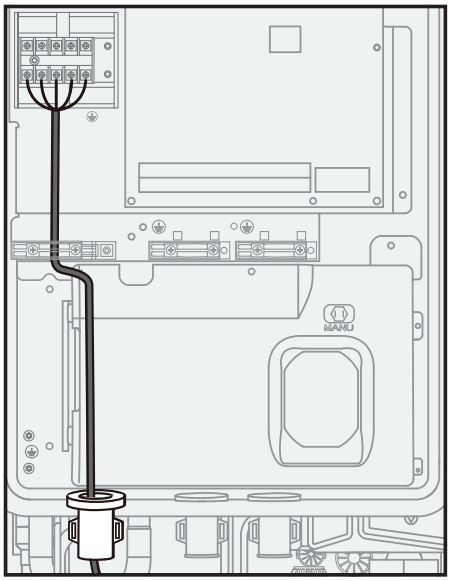

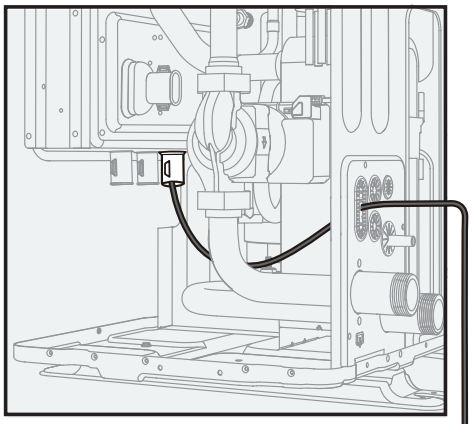

Main power supply

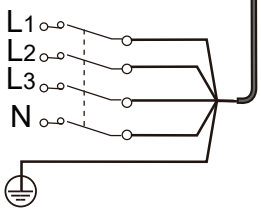

46

A residual current circuit breaker must be installed.

1.10 CONNECTION OF OTHER COMPONENTS.

The port provides the control signal to the load.Two types of ports for the control signal:

- **Type 1**: potential-free contact.
- **Type 2**: the port provides the signal at a voltage of 220–240 V~ 50 Hz.

If the load current is less than 0.2 A, the load can be connected directly to the port.If the load current is greater than or equal to 0.2 A, an AC contactor must be connected to the load.
The following illustrations refer to three-phase units. The principle is the same for single-phase units.

Type 1

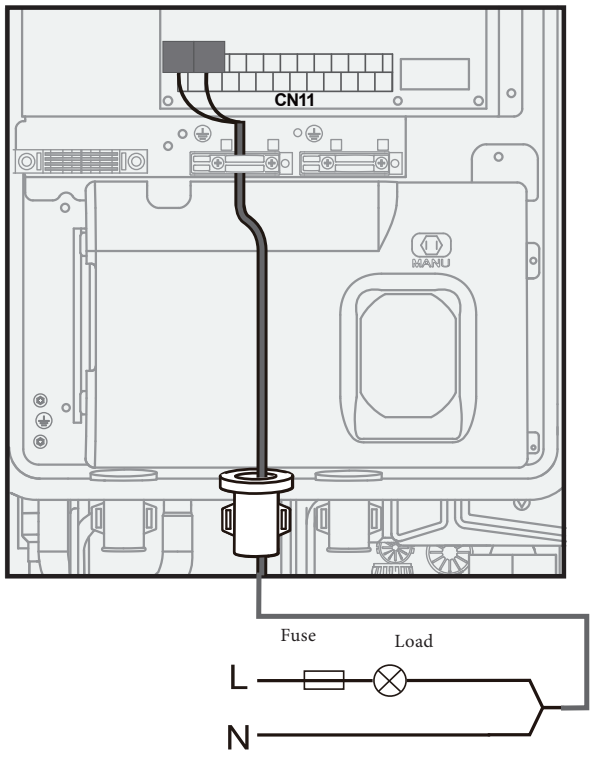

47

Type 2

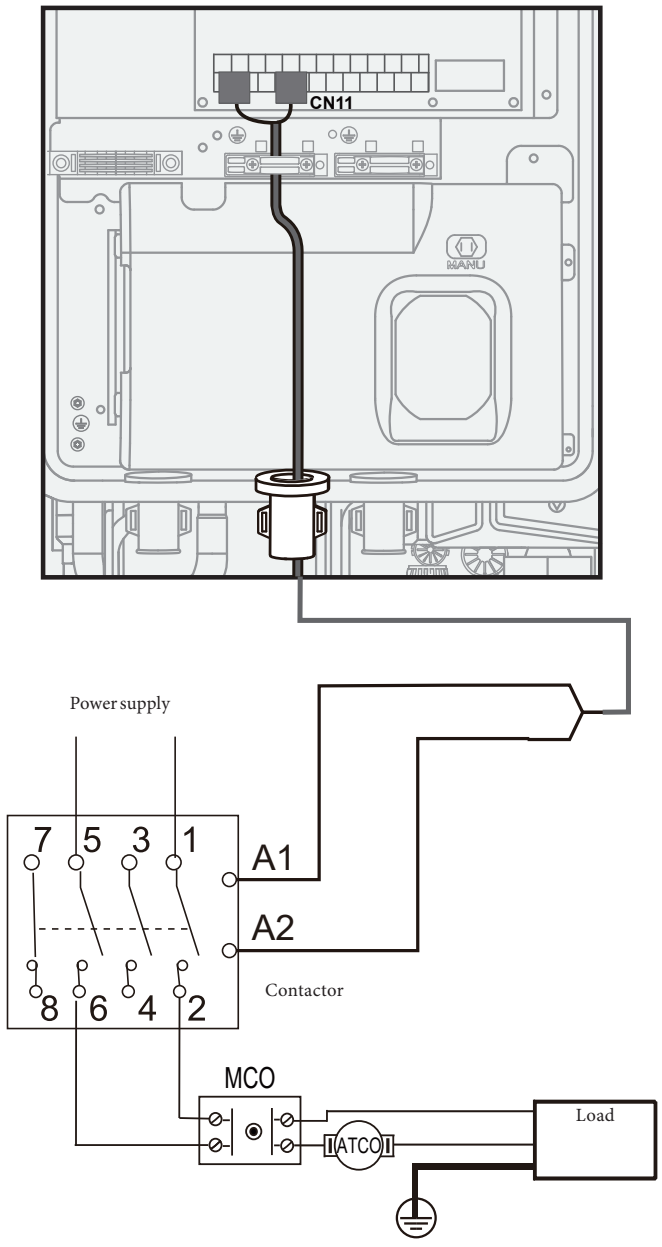

48

Hydraulic module control signal port: CN11 contains the terminals for the 3-way valve, pump, tank electric heater and supplementary electric heater, etc.Connect the cable to an appropriate terminal as shown in the figure and secure it firmly.

1.10.1 Wiring of 3-way valves SV1, SV2 and SV3

The following images are for this type of SV:

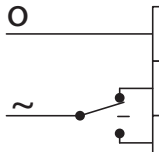

C1	Neutral
ON	Phase for opening
OFF	Phase for closing

49

SV1 3-way reversing valve

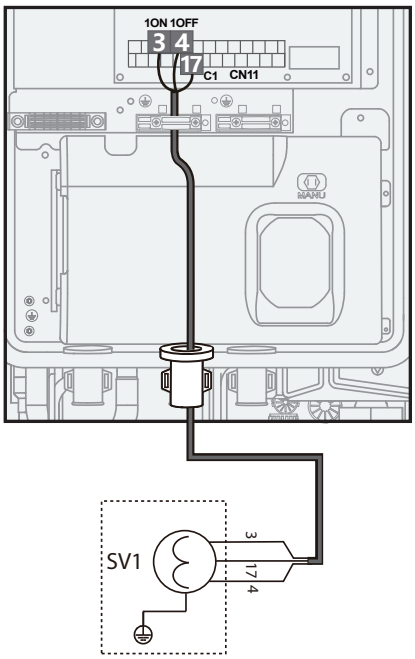

50

SV2 3-way reversing valve

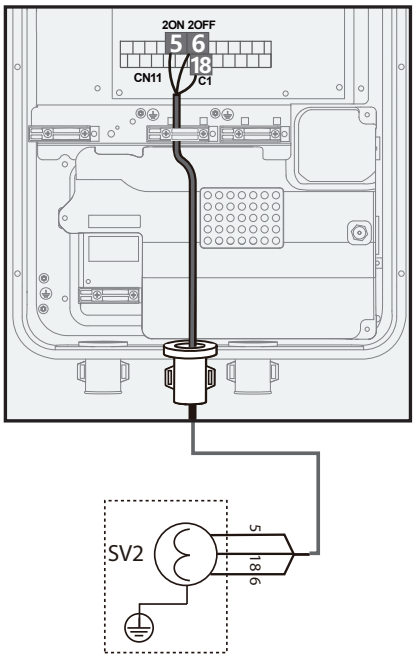

51

The following images are for this type of SV:

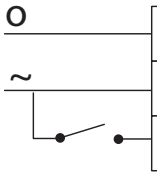

C1	Neutral
L	Phase for normal closing
ON	ON/OFF phase

52

SV1 3-way reversing valve

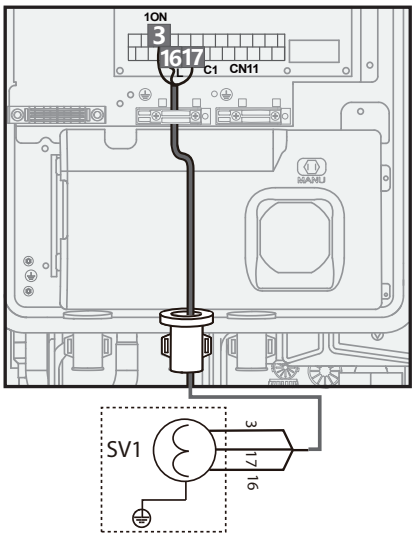

53

SV2 3-way reversing valve

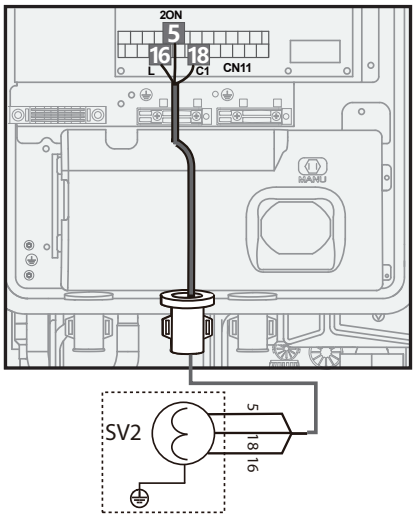

54

The following illustration is for mixing valve SV3:

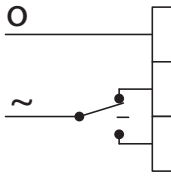

C1	Neutral
ON	Phase for opening
OFF	Phase for closing

55

Mixing valve SV3:

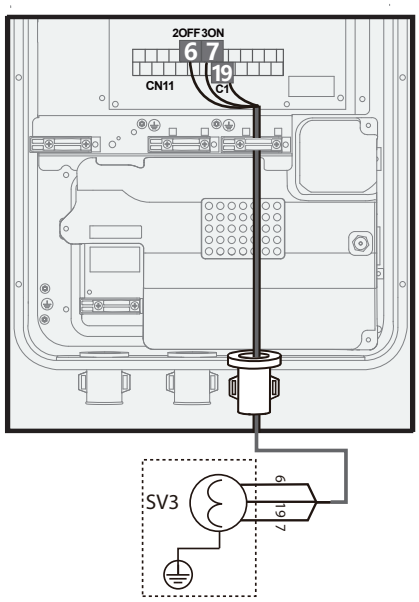

56

If SV3 is installed as a mixing valve, the wired controller must change "Mixing valve SV3" to "yes" (setting path: For after-sales service -> Input definition -> Mixing valve SV3).

When SV3 uses a mixing valve, SV2 can no longer be used to switch between the heating and cooling terminals.

SV3 does not have protection against excessively high or low temperatures; the terminal device must add supplementary thermal protection.

It must be ensured that the SV wiring connection is correct, otherwise the system will operate in an unexpected way.

C1 is for the neutral conductor.

Voltage	**220-240 V AC**
Maximum operating current (A)	0.2
Minimum cable cross-section (mm^2)	0.75
Type of signal of control port	Type 2

1.10.2 Wiring of additional pumps

Zone 2 pump:

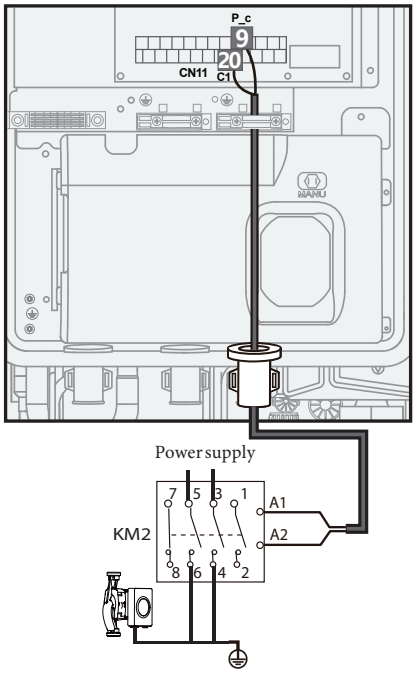

57

Additional circulation pump (Zone 1)

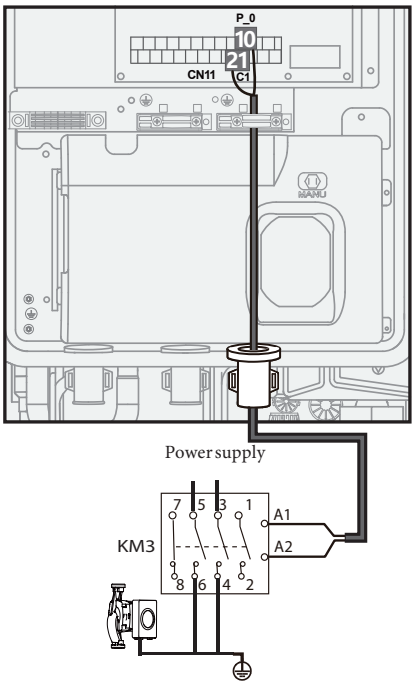

58

Solar heating circuit circulation pump

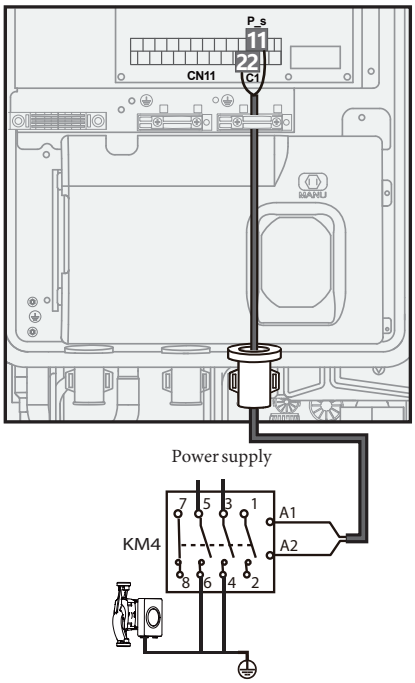

59

DHW pump

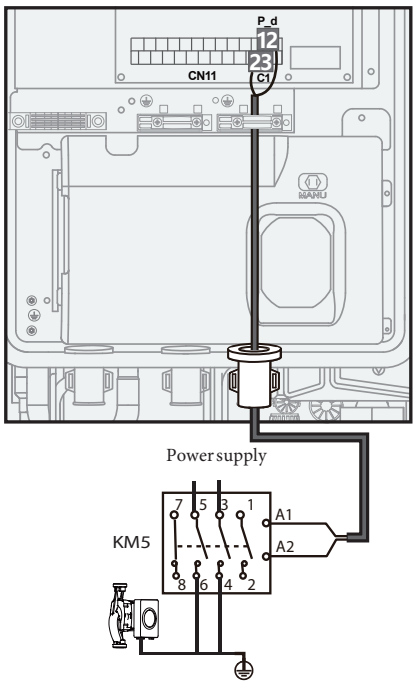

60

Voltage	220-240 V AC
Maximum operating current (A)	0.2
Minimum cable cross-section (mm^2)	0.75
Type of signal of control port	Type 2

1.10.3 Alarm or defrost operation wiring

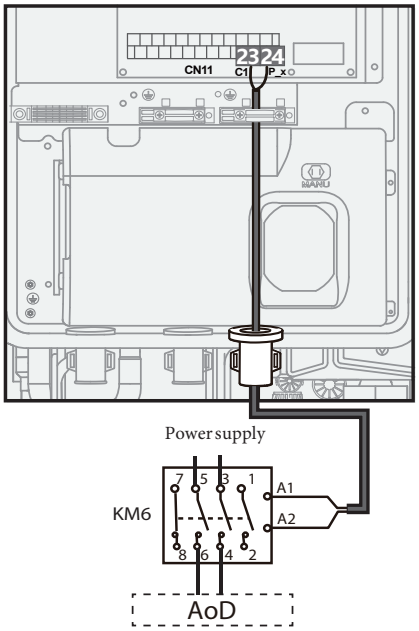

61

Voltage	220-240 V AC
Maximum operating current (A)	0.2
Minimum cable cross-section (mm^2)	0.75
Type of signal of control port	Type 2

1.10.4 Tank electric heater (TBH) wiring

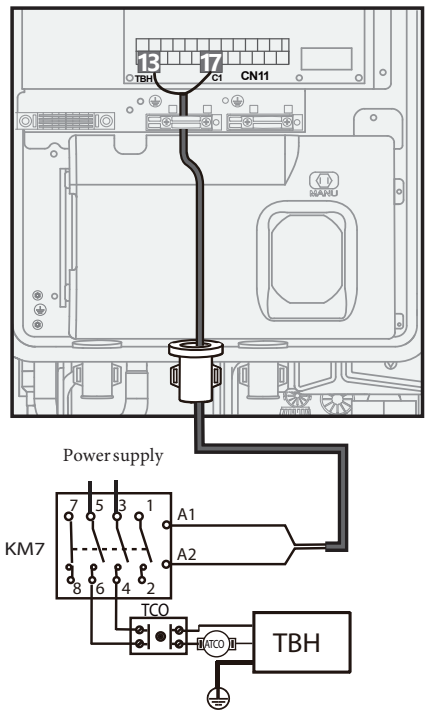

62

TCO: Manual reset thermal protector.
ATCO: Automatic reset thermal protector.

1.10.5 External IBH box wiring

To activate the external supplementary electric heater, set the DIP switches correctly (refer to paragraph 1.21.1 "Overview of DIP switch settings.").

For control with one IBH step:

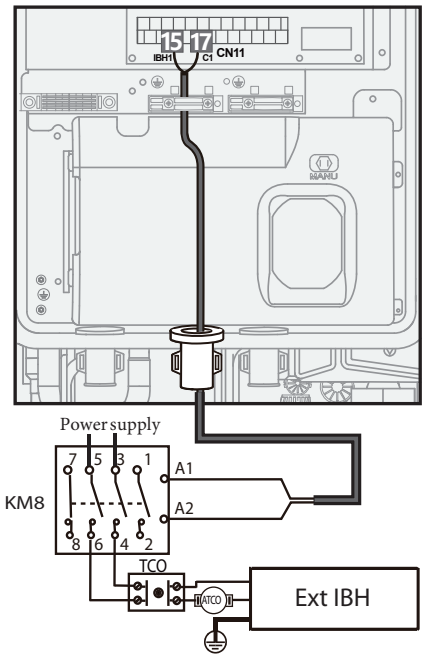

63

For control with 2 and 3 IBH steps:

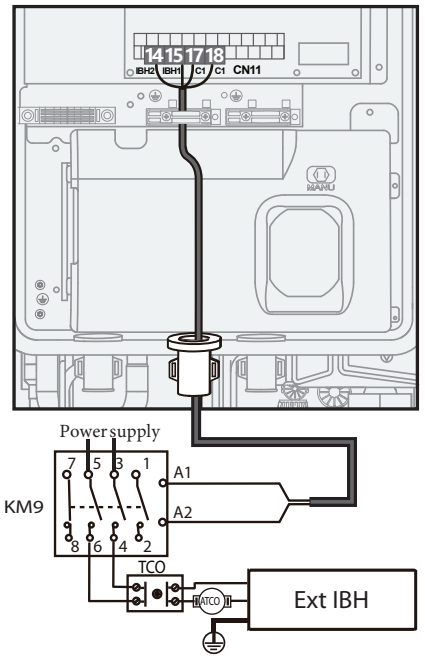

64

Voltage	220-240 V AC
Maximum operating current (A)	0.2
Minimum cable cross-section (mm^2)	0.75
Type of signal of control port	Type 2

The unit only sends the ON/OFF signal to the heater.
IBH2 cannot be wired independently.

1.10.6 Room thermostat (RT) wiring

The room thermostat must operate at low voltage.

The thermostat cable can be connected in three ways (as described in the following figures) and the specific connection method depends on the application.

Method A (mode setting control)

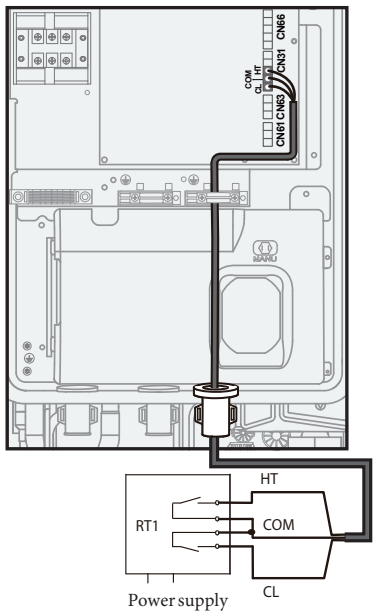

65

RT can independently control heating and cooling.When the hydraulic module is connected to the external temperature controller, the room thermostat is set to the mode set on the user interface:

- **A.1** When thermostat "CL" remains closed for 15 s, the system will operate according to the priority mode set on the user interface.The default priority mode is Heating.
- **A.2** When thermostat "CL" remains open for 15 s and "HT" is closed, the system will operate according to the non-priority mode set on the user interface.
- **A.3** When thermostat "HT" remains open for 15 s and "CL" is open, the system shuts down. (Mode setting control)
- **A.4** When thermostat "CL" remains open for 15 s and "HT" is open, the system shuts down.

The port closing voltage is 12 V DC, the port disconnection voltage is 0 V DC.

Method B (single zone control):

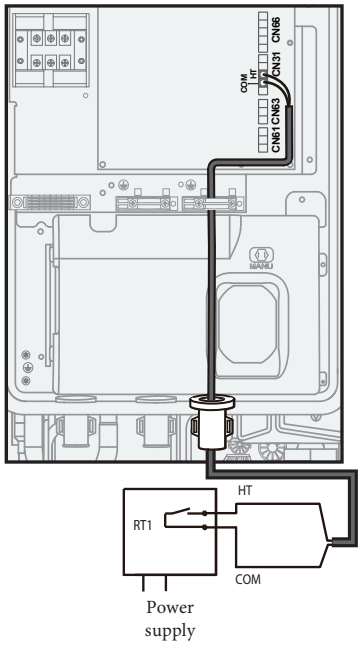

66

RT provides the switching signal to the unit.The room thermostat is set to one zone on the user interface:

- **B.1** When thermostat "HT" remains closed for 15 s, the unit switches on.
- **B.2** When thermostat "HT" remains open for 15 s, the unit switches off.

Method C (2-zone control):

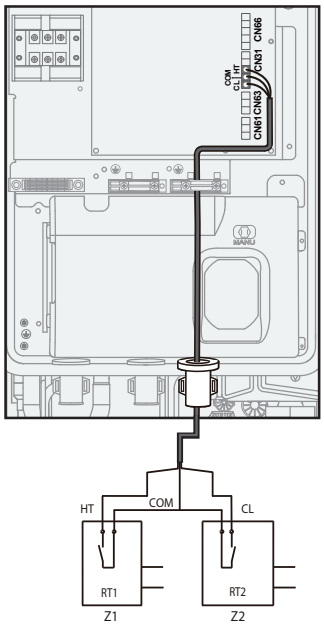

67

The hydraulic module is connected to two room thermostats and the room thermostat is set to dual zone on the user interface:

- **C.1** When thermostat "HT" remains closed for 15 s, zone 1 switches on.When thermostat "HT" remains open for 15 s, zone 1 switches off.
- **C.2** When thermostat "CL" remains closed for 15 s, zone 2 switches on.When thermostat "CL" remains open for 15 s, zone 2 switches off.

The wiring of the thermostat matches the settings of the wired controller.
The power supply of the device and the room thermostat must be connected to the same neutral line.
When the room thermostat is not set to NO, the internal temperature sensor Ta cannot be set to VALID.
Zone 2 can only operate in heating mode.When cooling mode is set on the wired controller and zone 1 is deactivated, "CL" in zone 2 closes and the system remains OFF.For installation, the wiring of the thermostats for Zone 1 and Zone 2 must be correct.

1.10.7 Solar energy input signal wiring (low voltage)

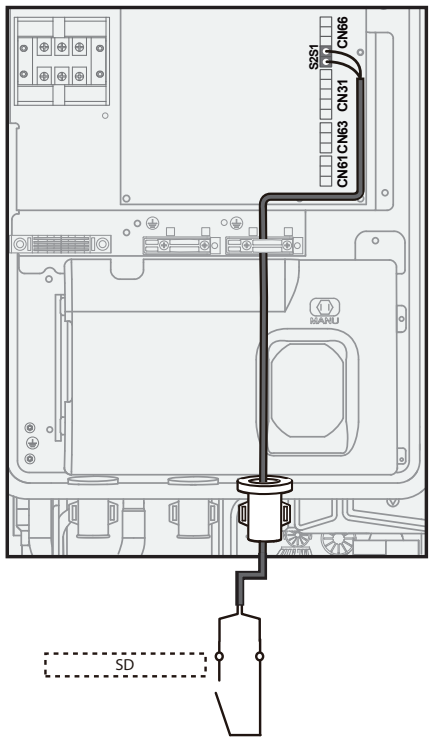

68

1.10.8 Remote shutdown wiring

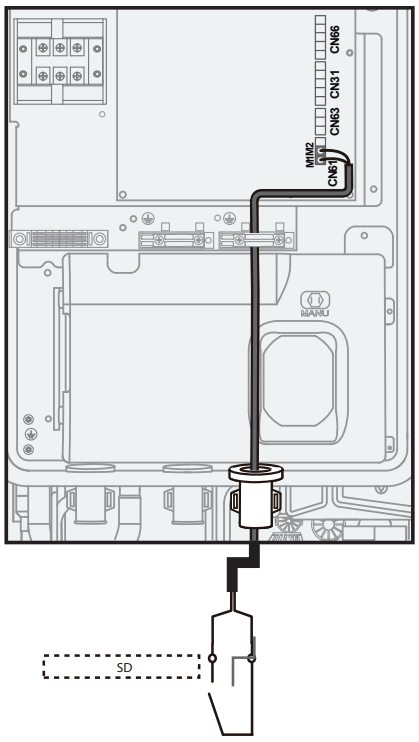

69

Configurable with parameter M1M2 (see paragraph 3.9.11 "Input definition").

1.10.9 Smart Grid wiring

The unit is fitted with a smart grid function that must be activated via the wired controller.Set the wired controller to "For after-sales service/Smart function settings/Smart grid" and configure the option to Yes.The heat pump will then receive signals through ports SG1 and SG2 on the PCB, as shown in the following figure:

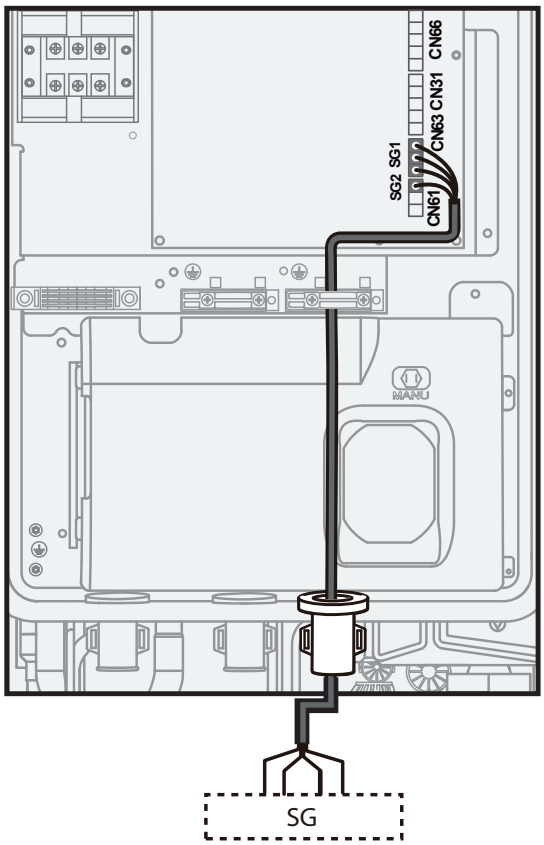

70

1) SG1=OFF, SG2=ON.

The heat pump initially operates in DHW mode.
When TBH is set to "available", if T5 is below 69 °C, TBH is forcibly switched on (the heat pump and TBH can operate simultaneously); if T5 is greater than or equal to 70 °C, TBH switches off. (DHW: Domestic Hot Water; T5S is the set temperature of the water tank).
When TBH is set to "not available" and IBH is set to "available" for DHW Mode, if T5 is below 69 °C, IBH is forcibly switched on (the heat pump and IBH can operate simultaneously); if T5 is greater than or equal to 70 °C, IBH switches off.

2) SG1=ON, SG2=ON or OFF.

The heat pump operates according to the power limitation, which is set via the parameters in the "For after-sales service/Smart function settings/Power limitation setting" option on the wired controller, with a default value of 0 kW.When the power limitation is set to 0 kW, the unit cannot operate; when the power limitation is set above 0 kW, the unit operates according to the set power limitation.

3) SG1 = OFF, SG2 = OFF.

The unit will operate normally.

As per standard, the SMART GRID function is deactivated. If you wish to activate the photovoltaic contact and use it the usual way, the Smart Grid function must be enabled and SG2 must be used as the photovoltaic contact.

1.11 CIRCULATION PUMP

The relationship between external static pressure (ESP) and water flow is shown below:

6 kW models

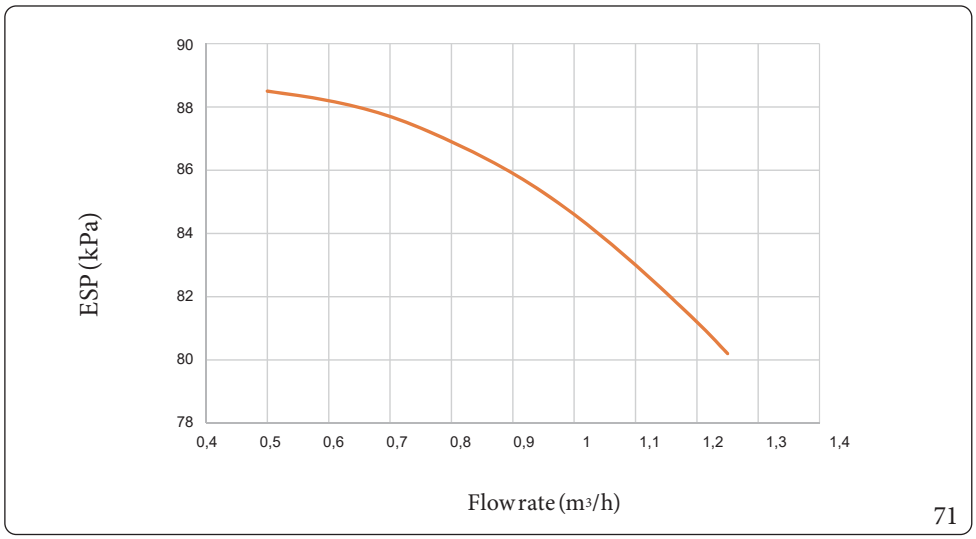

71

Flow rate	ESP (kPa)
0.5	88.5
0.6	88.2
0.7	87.7
0.8	86.9
0.9	85.9
1	84.6
1.1	83
1.2	81.2
1.25	80.2

8/10 kW models

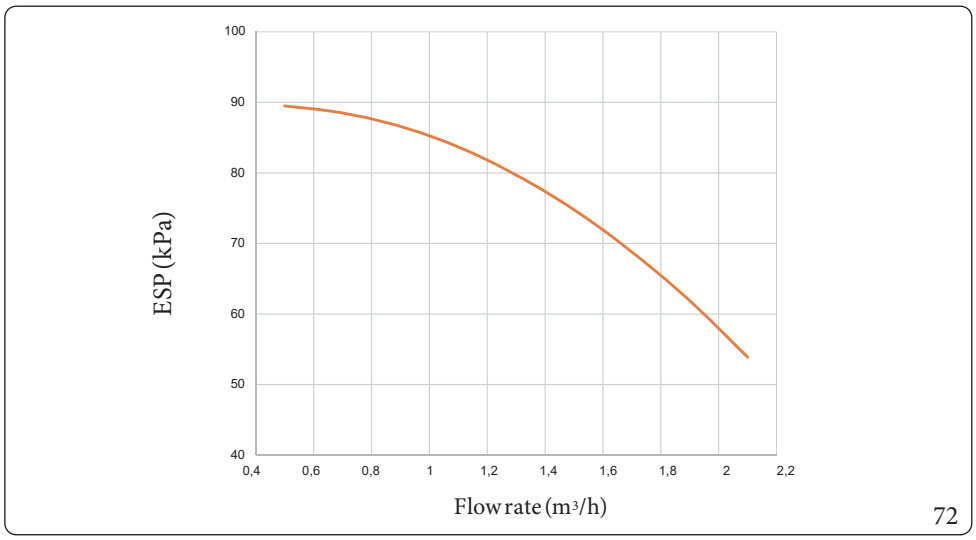

72

Flow rate	ESP (kPa)
0.5	89.5
0.7	88.5
0.9	86.6
1.1	83.7
1.3	79.7
1.5	74.8
1.7	68.8
1.9	61.9
2.1	53.9

12/16 kW models

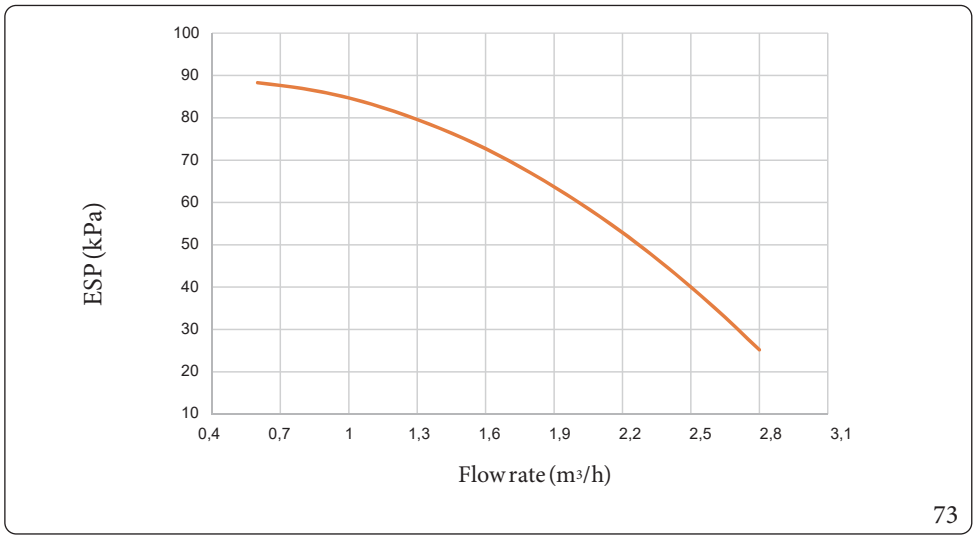

73

Flow rate	ESP (kPa)
0.6	88.3
0.8	86.9
1	84.7
1.2	81.5
1.4	77.5
1.6	72.7
1.8	66.9
2	60.3
2.2	52.9
2.4	44.5
2.6	35.3
2.8	25.2

1.12 OPERATING LIMITS

The appliance was designed to operate within a specific outdoor temperature range and at a specific maximum flow temperature; these limits are represented in the graph (Fig. 74, 75, 76, 77).

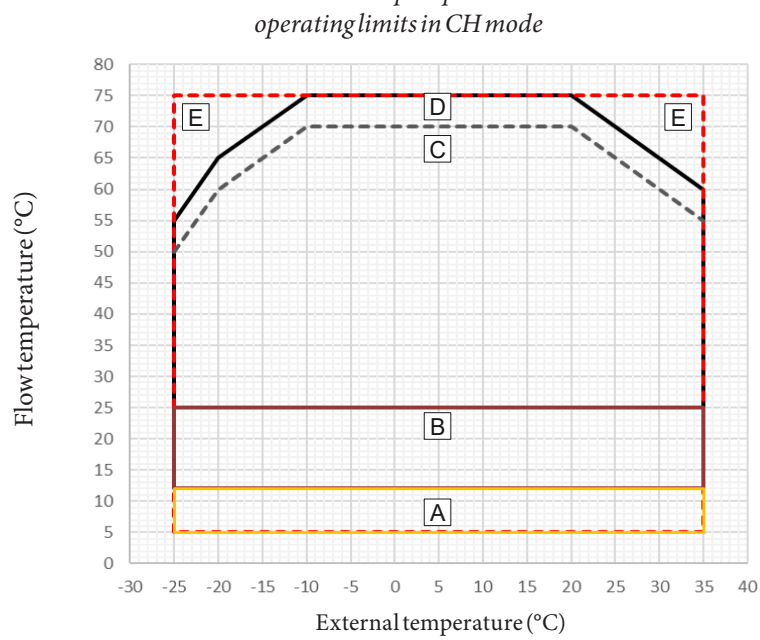

74

Key to Fig. 74:

- *A* - *HP/EH Capacity not guaranteed: if the IBH setting is active, IBH only switches on. If the IBH setting is not active, only the heat pump switches on (there could be cases of restriction and protection while the heat pump is running).*
- *B* - *HP Capacity not guaranteed: heat pump operating range with possible limitation and protection.*
- *C* - *EWT Max: maximum entering water temperature.*
- *D* - *HP*
- *E* - *EH*

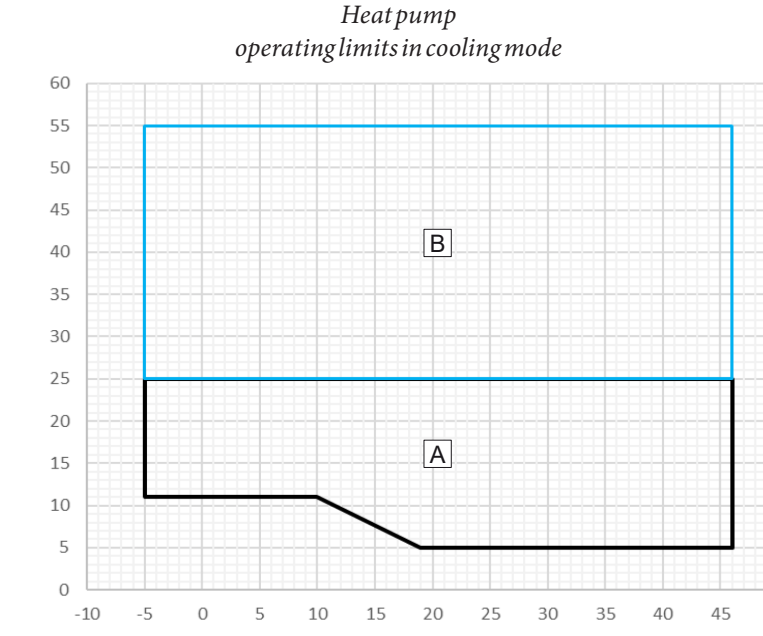

75

Key to Fig. 75:

- *A* - *HP*
- *B* - *HP Capacity not guaranteed: heat pump operating range with possible limitation and protection.*

Heat pump
operating limits in DHW mode

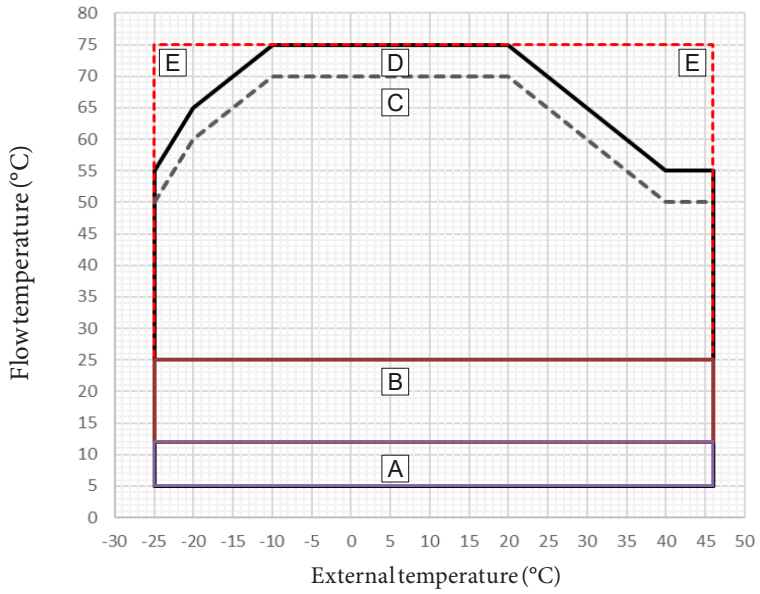

76

Key to Fig. 76:

- *A* - *HP/EH Capacity not guaranteed: if the IBH setting is active, IBH only switches on. If the IBH setting is not active, only the heat pump switches on (there could be cases of restriction and protection while the heat pump is running).*
- *B* - *HP Capacity not guaranteed: heat pump operating range with possible limitation and protection.*
- *C* - *EWT Max: maximum entering water temperature.*
- *D* - *HP*
- *E* - *EH*

Heat pump
operating limits in DHW mode (with DHW tank)

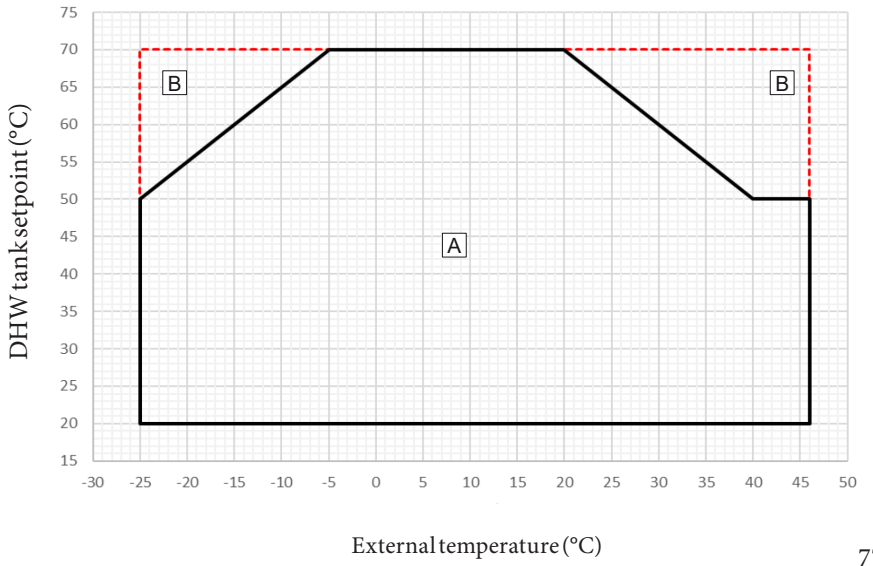

77

Key to Fig. 77:

- *A* - *EH*
- *B* - *HP Capacity not guaranteed: heat pump operating range with possible limitation and protection.*

1.13 ADDITIONAL EXPANSION VESSEL AND WATER VOLUME.

The units are fitted with an 8 L expansion vessel (the effective volume is 5 L; use the effective volume for calculation) with a default pre-pressure of 1.5 bar.

When the capacity of the built-in expansion vessel is insufficient for the system due to high water volume, an additional expansion vessel is required (not supplied by Immergas).

Refer to the following formula to determine the specifications of the additional expansion vessel.

Water-only system	System with 35% glycol
$V_2 = \frac{4C * 0{,}0258 - V_1 * (3 - Pg_1)}{3 - Pg_2}$	$V_2 = \frac{4C * 0{,}0179 - V_1 * (3 - Pg_1)}{3 - Pg_2}$

V2 - *Additional expansion vessel volume, in L*
V1 - *Built-in expansion vessel volume, in L, 5 L*
C - *Volume of system water, in L*
Pg_2 - *Additional expansion vessel pre-pressure (relative pressure), in bar*
Pg_1 - *Integrated expansion vessel pre-pressure (relative pressure), in bar, 1.5 bar*

Maximum water volume without glycol (L)

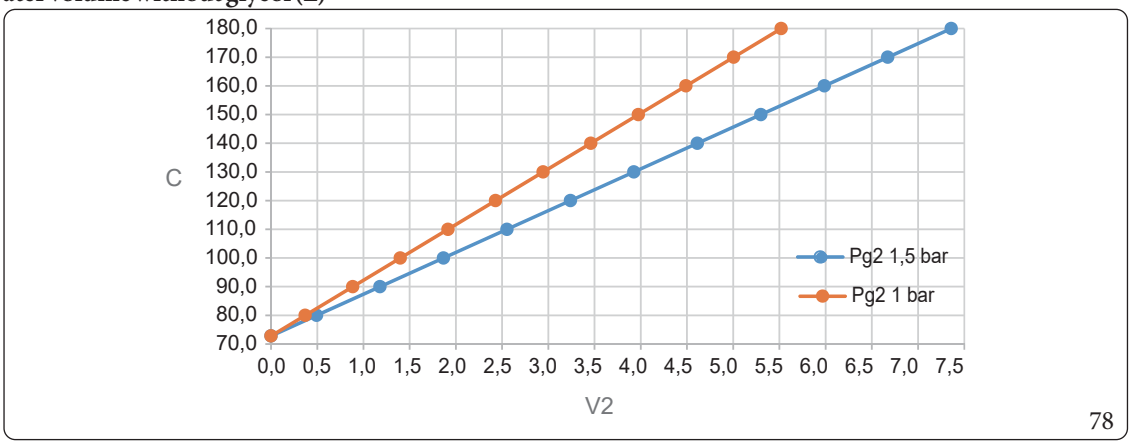

78

Maximum water volume with 35% glycol (L)

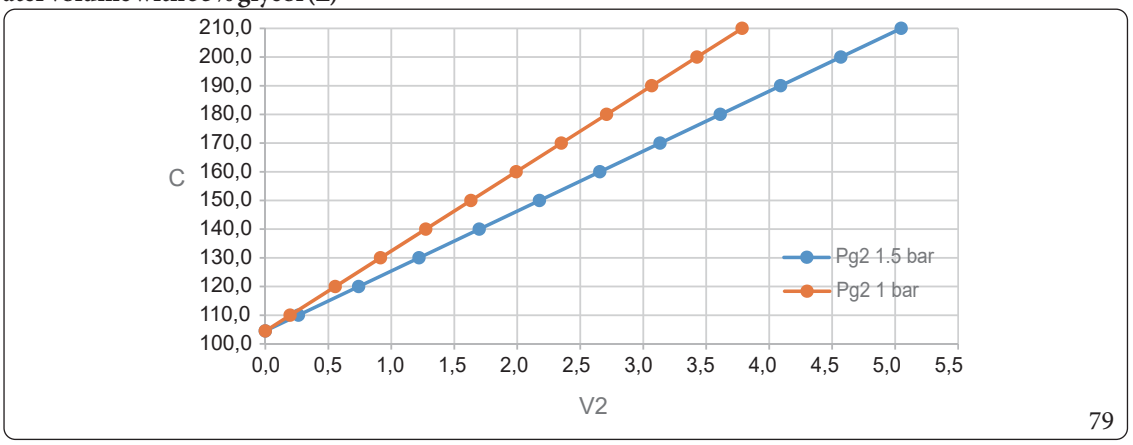

79

It is recommended to install an expansion vessel on the tap water side. Ensure that the total water volume of the installation, excluding the internal water volume of the unit, is at least 40 L.

1.14 KITS AVAILABLE ON REQUEST

Check the complete list of kits available and which can be combined with the product, consult the Immergas website, the Immergas Price List or the technical-commercial documentation (catalogues and data sheets).

1.15 CONTROL PANEL INSTALLATION

The general wiring instructions given in the preceding chapters must be observed.
The wired remote controller must be installed indoors and kept away from direct sunlight.
Keep the wired remote controller away from any ignition sources, flammable gases, oil, water vapour and sulphurous gases.
To avoid electromagnetic interference, keep the wired remote controller at a suitable distance from electrical appliances such as lamps.
The remote wired controller circuit operates at low voltage. Never connect it to a standard 220–240 V~/380–415 V~ circuit or insert it in the same wiring conduit as such a circuit.
Use a terminal block to extend the signal cable if necessary.
Do not use a megger to check the insulation of the signal cable after connection.

1.15.1 Installation materials

Ensure that the accessory bag contains the following items:

Description	Quantity	Notes
Control panel	1	
Wood screw ST 4×20	4	For wall-mounting
Plastic support bar	2	For mounting on 86-type box
Cross-head screw M 4×25	2	For mounting on 86-type box
Wall plugs	4	For wall-mounting
Control panel bottom cover	1	

1.15.2 Control panel main dimensions

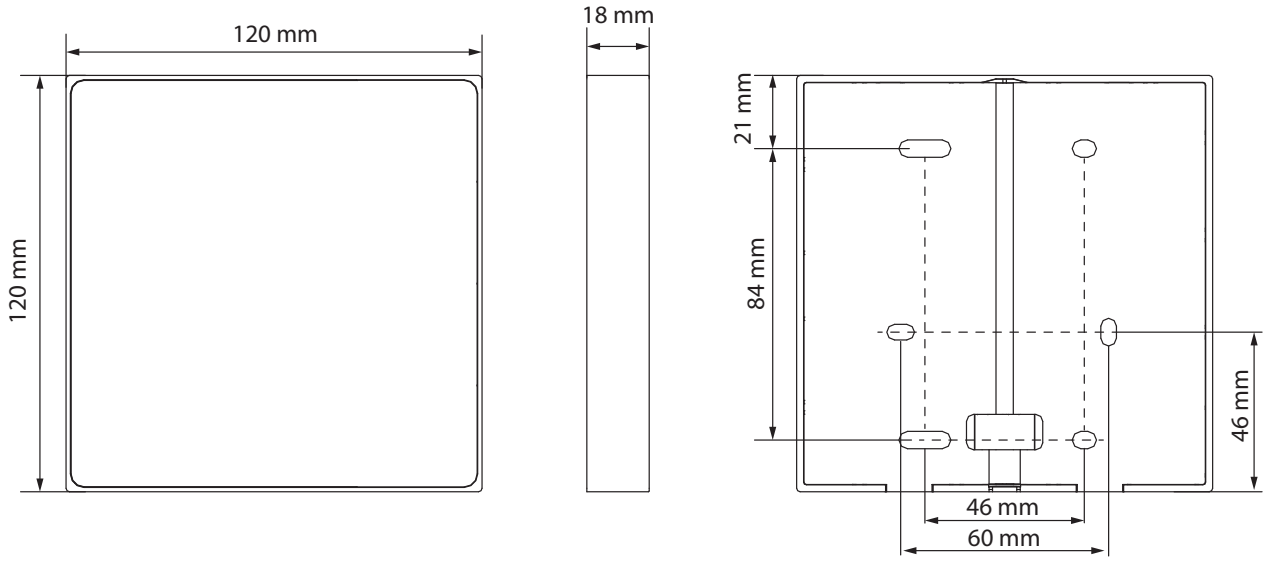

80

1.15.3 Control panel wiring

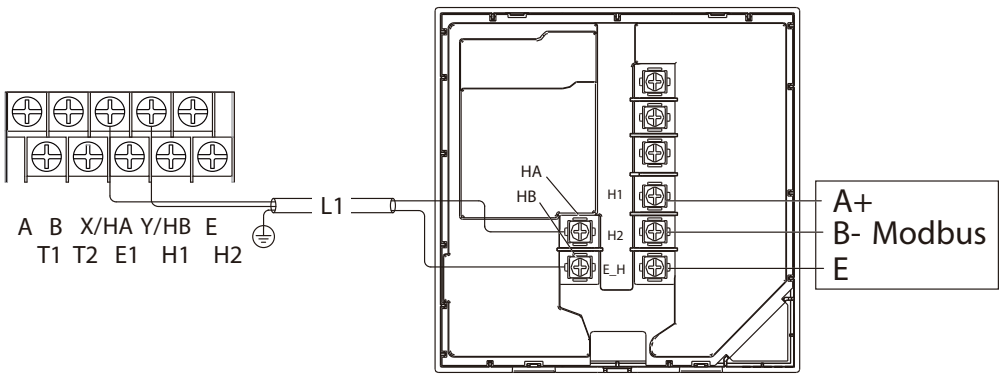

81

Input voltage (HA/HB)	220-240 V AC
Minimum cable cross-section (mm²)	0.75
Type of cable	2-conductor shielded twisted-pair cable
Cable length	L1 ≤ 50 m

The maximum communication cable length between the unit and the panel is 50 m.

Connections

Bottom-side wiring

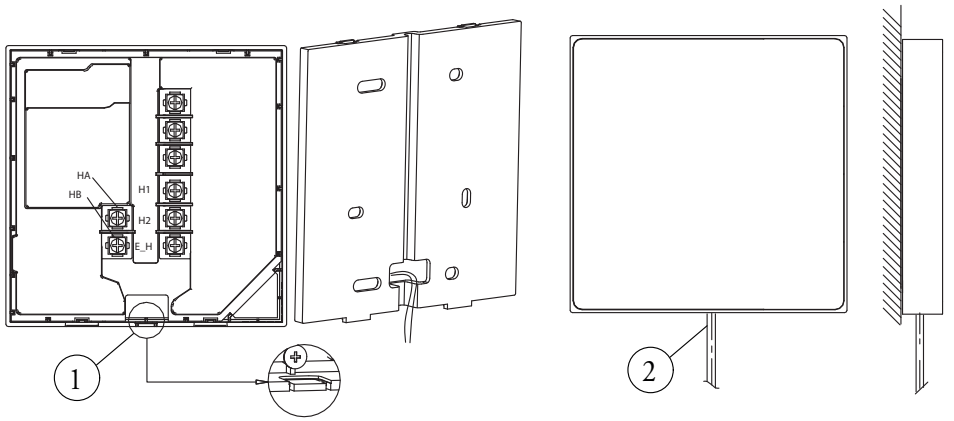

82

In-wall wiring (with 86-type box)

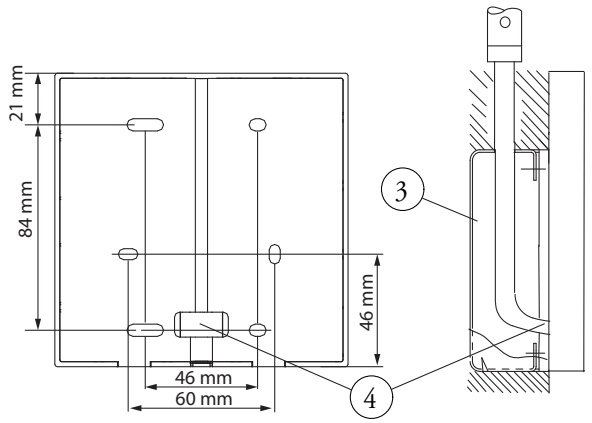

83

In-wall wiring (without 86-type box)

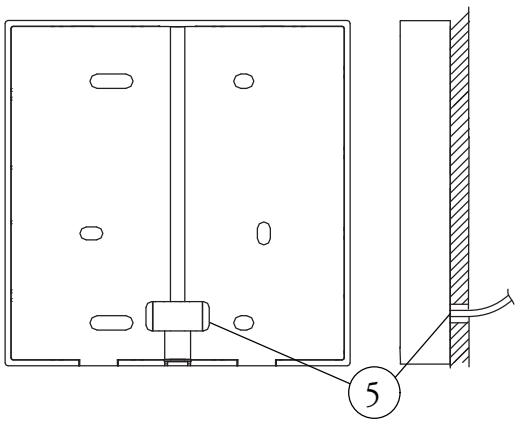

84

Key (Fig. 82; 83; 84):

1 - Wire outlet position on the rear side
2 - Wire outlet on the bottom side
3 - Electrical panel
4 - Wire hole
5 - Wall hole and wire hole Ø 8 mm – Ø 10 mm

1.15.4 Mounting

The control panel must be wall-mounted rather than recessed, otherwise maintenance will not be possible.

Wall mounting (without 86-type box)

Install the rear cover directly on the wall using four screws ST 4 x 20.

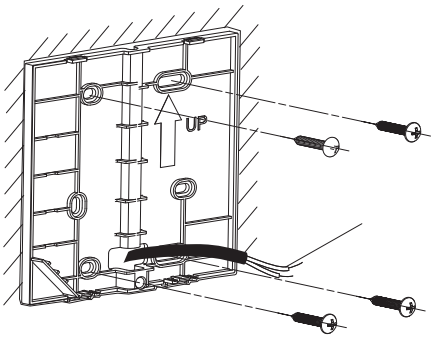

85

Wall mounting (with 86-type box)

Install the rear cover on an 86-type box using two screws M 4 x 25 and secure the box to the wall using two screws ST 4 x 20. If the box is not fully recessed in the wall, two screws ST 4 x 20 can be saved depending on the situation.

- Adjust the length of the plastic bolt in the accessory box to suit the installation.
- Secure the bottom cover of the wired remote controller to the wall via the threaded bar using cross-head screws. Ensure that the bottom cover is flush with the wall.
- Fit the front cover and secure it correctly to the rear cover, leaving the wire free during installation.

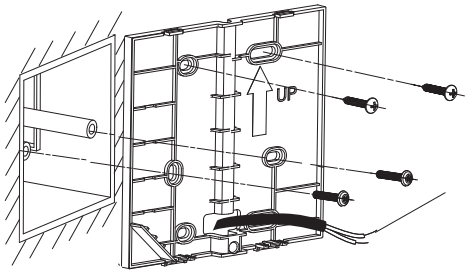

86

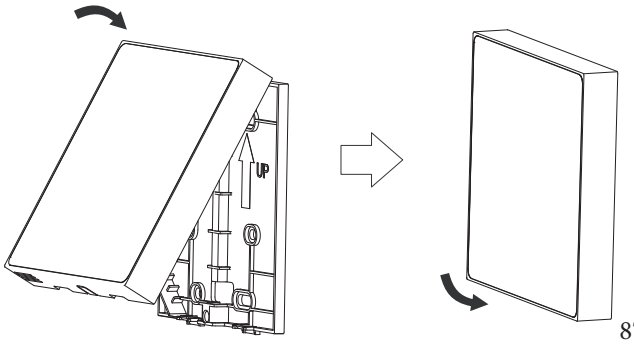

87

To prevent water from entering the wired remote controller, use conduit fittings and plugs to seal the cable connections during wiring.

Excessive tightening of the screw may cause deformation of the rear cover.

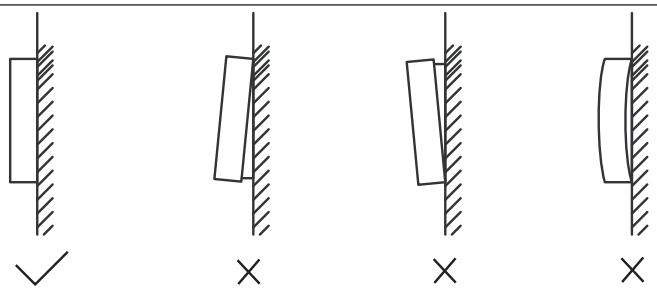

88

1.16 CASCADE INSTALLATION

Connection diagram of the electric control system of the cascade system (1N~)

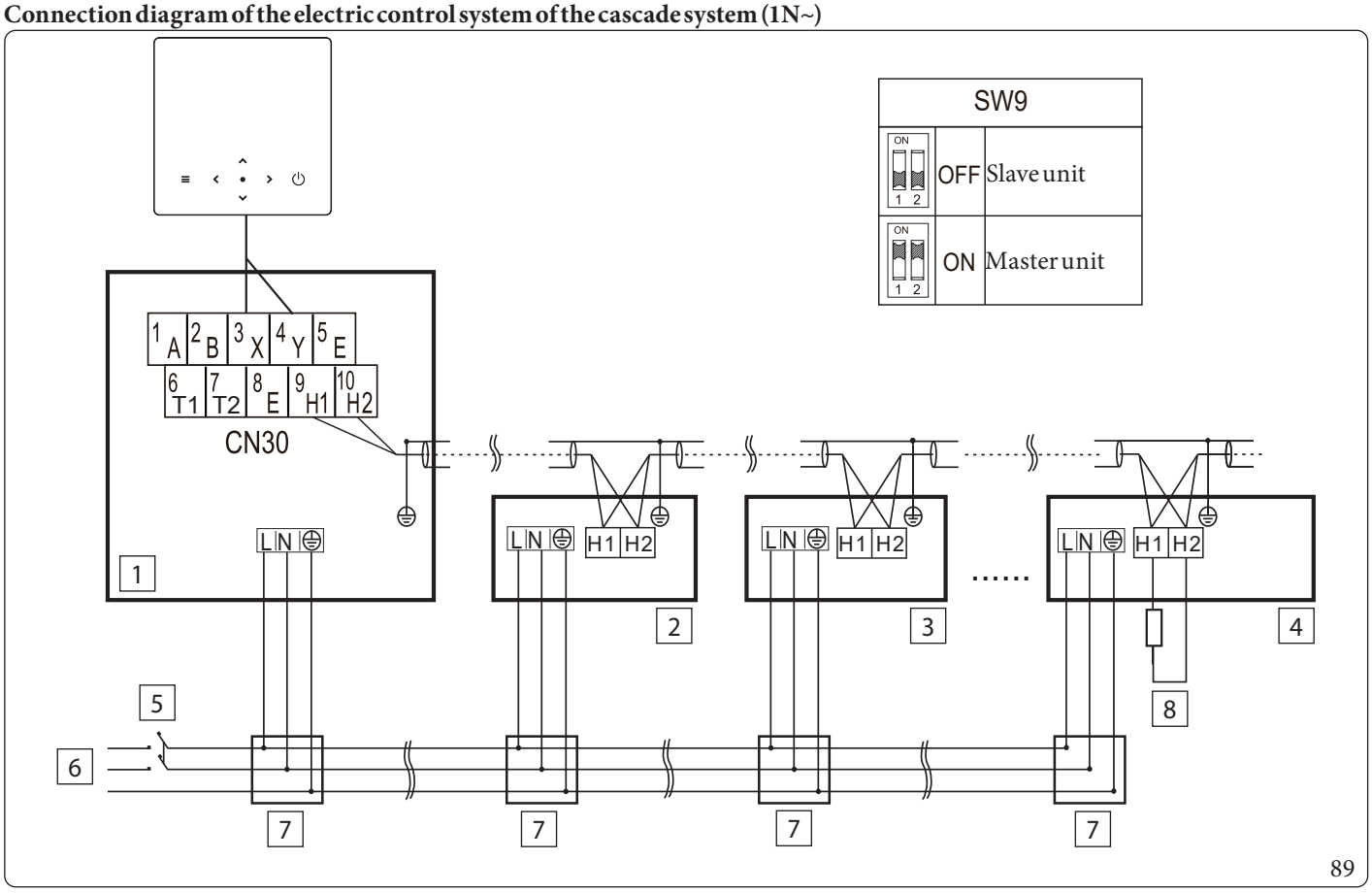

Key (Fig. 89):

1 - Master Unit
2 - Slave 1 unit
3 - Slave 2 unit
4 - Slave 3 unit
5 - On/Off Switch
6 - Internal power supply
7 - Distribution board
8 - External resistance (only the last IDU requires an additional termination resistor on H1 and H2)

Connection diagram of the electric control system of the cascade system (3N~)

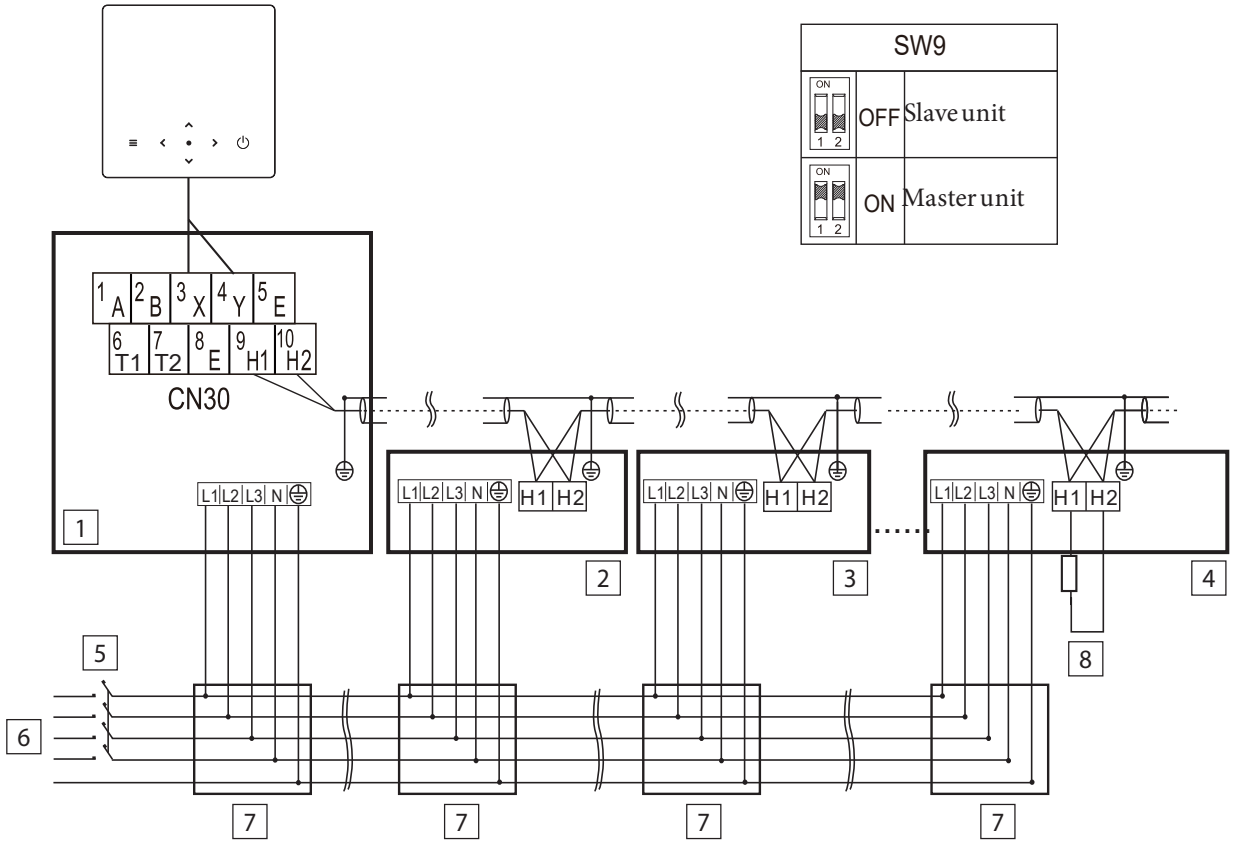

90

Key (Fig. 90):

1 - Master Unit
2 - Slave 1 unit
3 - Slave 2 unit
4 - Slave 3 unit
5 - On/Off Switch
6 - Internal power supply
7 - Distribution board
8 - External resistance(only the last IDU requires an additional termination resistor on H1 and H2)

- The cascade function supports up to 6 units.
- To ensure successful automatic addressing, all units must be connected to the same power supply and powered up simultaneously.
- Only the master unit can connect to the controller and the SW9 switch of the master unit must be set to "on".Slave units cannot connect to the controller.
- Use shielded cables and ensure they are properly earthed.

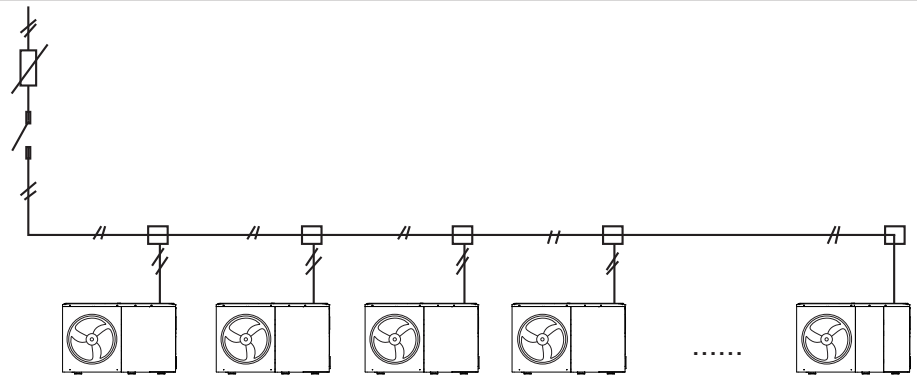

91

1.17 UNIT INSTALLATION COMPLETION

Risk of electric shock.
Risk of burns.

The following illustrations are based on 8–16 kW units. The principle is the same for 6 kW units.
Store the screws properly for later use.

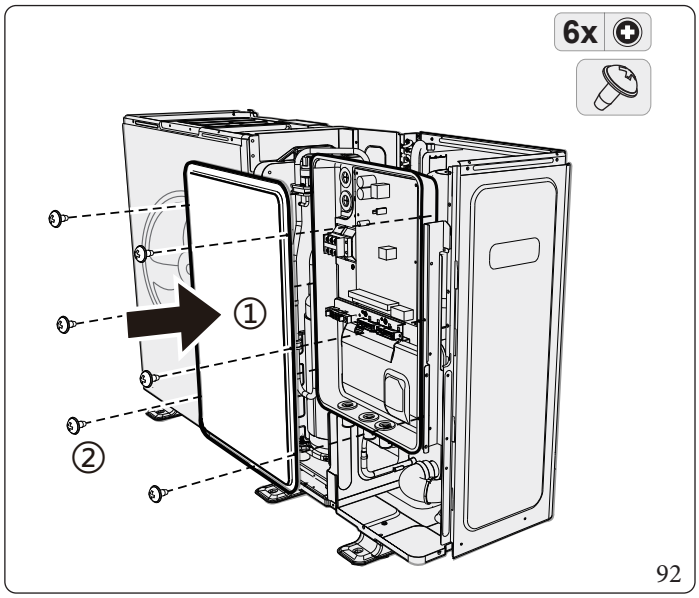

92

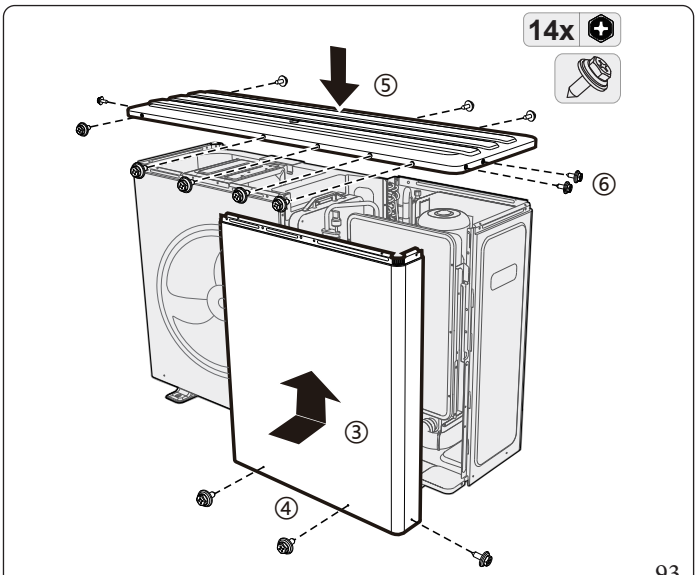

93

Tightening torque	4.1 N•m

1.18 TYPICAL INSTALLATION EXAMPLES

- Remember to install the condensate drain circuits.
- For the electrical connection sections, it is recommended to check the instructions given in the individual component manuals.
- The installation of a buffer tank should be evaluated based on the water volume of the system.
- The functional diagrams provided are for illustrative purposes only.
- To ensure correct heat pump operation, a by-pass must be evaluated for each system to guarantee a minimum flow rate of 500 l/h for 6/8/10 kW models and 600 l/h for 12/16 kW models.
- For cascade installations, a minimum water volume of 40 litres per unit installed in the system must be guaranteed.
- Check the instruction booklets for the set up of the hydraulic and electric connections and for the cross-section of the cables.
- Check the instruction booklets for component positioning and maximum permissible distances.
- In the case of a 2-zone installation, Zone 2 can only operate in heating mode.

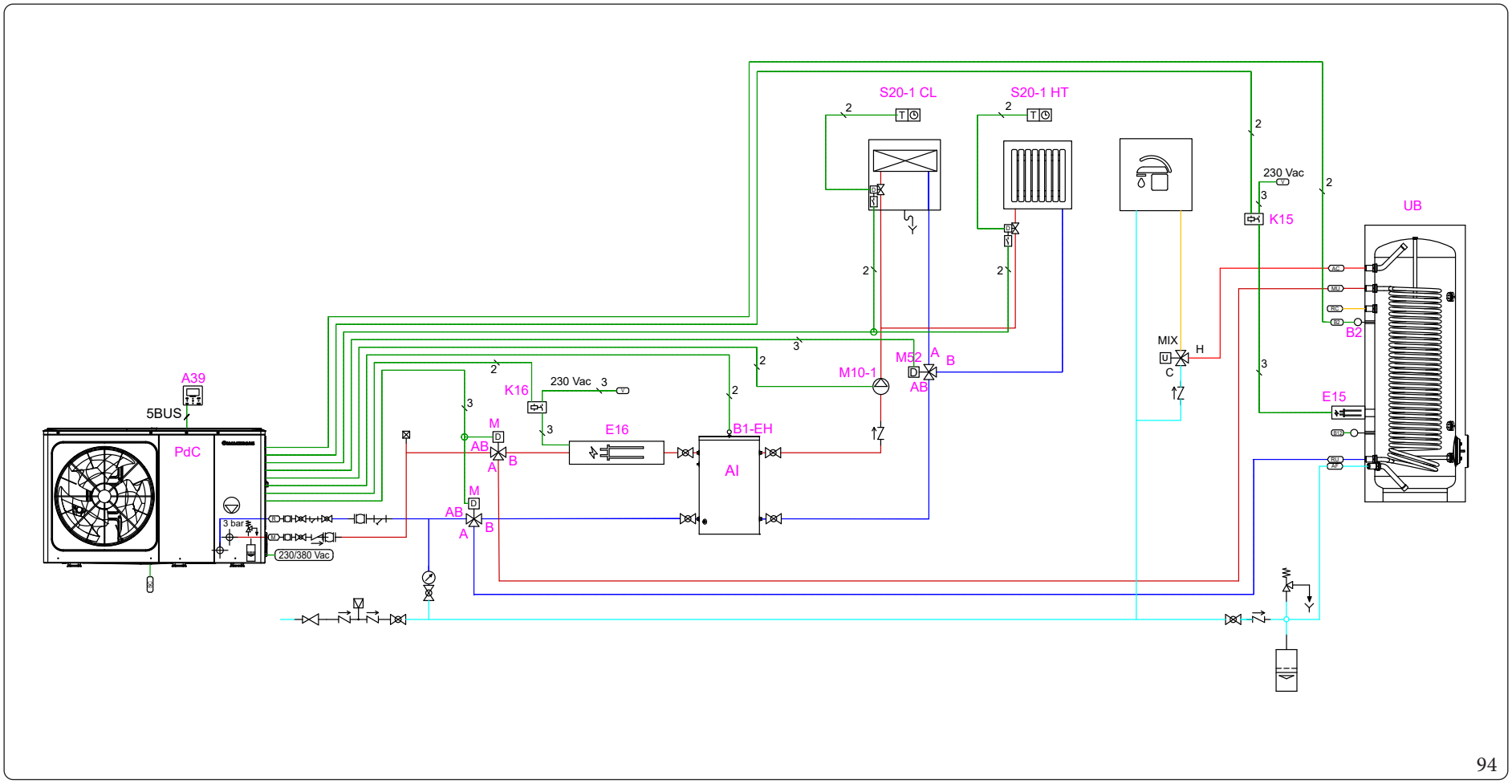

94

Key (Fig. 94):

- *A39 - MAGIS M V2 control panel*
- *B1 - Flow temperature sensor for system heater (Code 3.033324)*
- *B2 - DHW probe (code 3.033324 50 kΩ 25° C)*
- *B3-2 - Zone 2 flow probe (code 3.033324)*
- *E15 - Domestic hot water integration resistance*
- *E16 - Supplementary heating element*
- *K15 - DHW integrative resistance enabling relay*
- *K16 - Supplementary heating element enable relay*
- *M50 - DHW priority 3-way valve*
- *M31-2 - Zone 2 mixing valve*
- *M10-1 - Zone 1 circulator*
- *M10-2 - Zone 2 pump*
- *S20-1 CL - Zone 1 room thermostat - cooling*
- *S20-2 HT - Zone 1 room thermostat - heating*
- *S20-2 - Zone 2 Room thermostat*
- *AI - Inertial storage tank*
- *PdC - Block heat pump with R290*
- *UB - DHW storage tank unit*

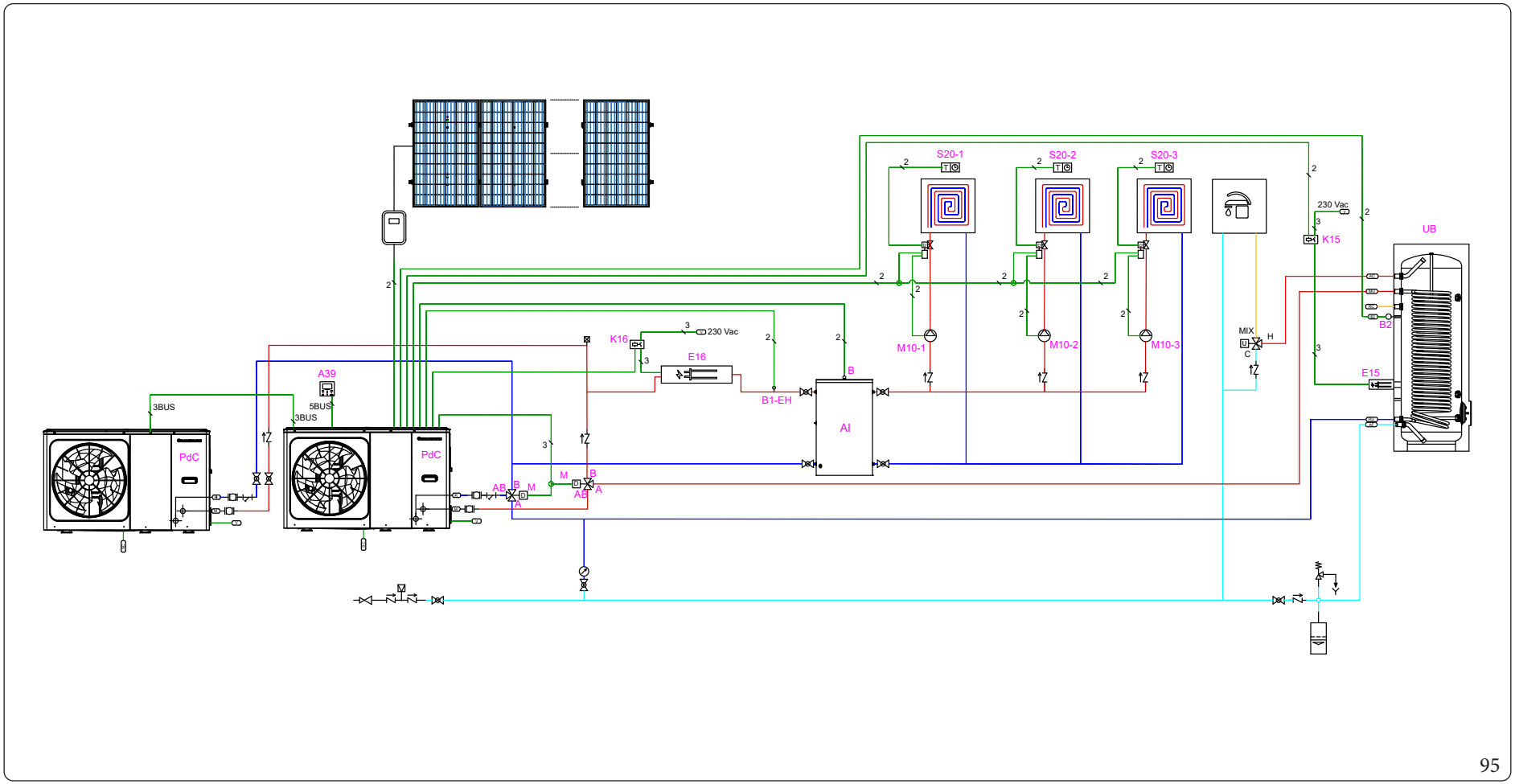

95

Key (Fig. 95):

- *A39 - MAGIS M V2 control panel*
- *B1-EH - Sensor after system electric heater (for supplementary heater)*
- *B34 - Buffer tank sensor / common flow sensor (code 3.033324)*
- *B2 - DHW probe (code 3.033324 50 kΩ 25° C)*
- *E15 - Domestic hot water integration resistance*
- *E16 - Supplementary heating element*
- *K15 - DHW integrative resistance enabling relay*
- *K16 - Supplementary heating element enable relay*
- *M50 - DHW priority 3-way valve*
- *M10-1 - Zone 1 circulator*
- *M10-2 - Zone 2 pump*
- *M10-2 - Zone 3 Pump*
- *S20-1 - Zone 1 Room thermostat*
- *S20-2 - Zone 2 Room thermostat*
- *S20-3 - Zone 3 Room thermostat*
- *AI - Inertial storage tank*
- *PdC - Block heat pump with R290*
- *UB - DHW storage tank unit*

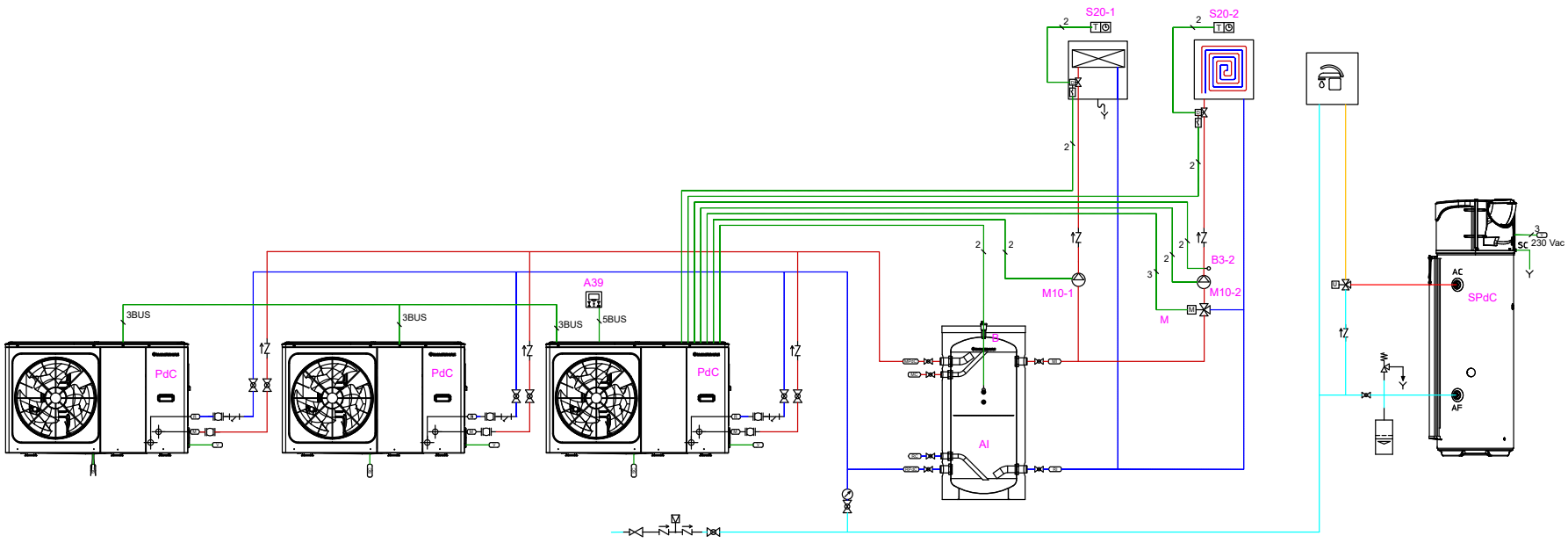

96

Key (Fig. 96):

- *A39 - MAGIS M V2 control panel*
- *B3-2 - Zone 2 flow probe (code 3.033324)*
- *B34 - Buffer tank sensor / common flow sensor*
- *M31-2 - Zone 2 mixing valve*
- *M10-1 - Zone 1 circulator*
- *M10-2 - Zone 2 pump*
- *S20-1 - Zone 1 Room thermostat*
- *S20-2 - Zone 2 Room thermostat*
- *AI - Inertial storage tank*
- *PdC - Block heat pump with R290*
- *SPdC - RAPAX 200-300 V3 heat pump water heater*
- *UB - DHW storage tank unit*

1.19 HYDRAULIC DIAGRAMS

Piping diagram MAGIS M6 V2

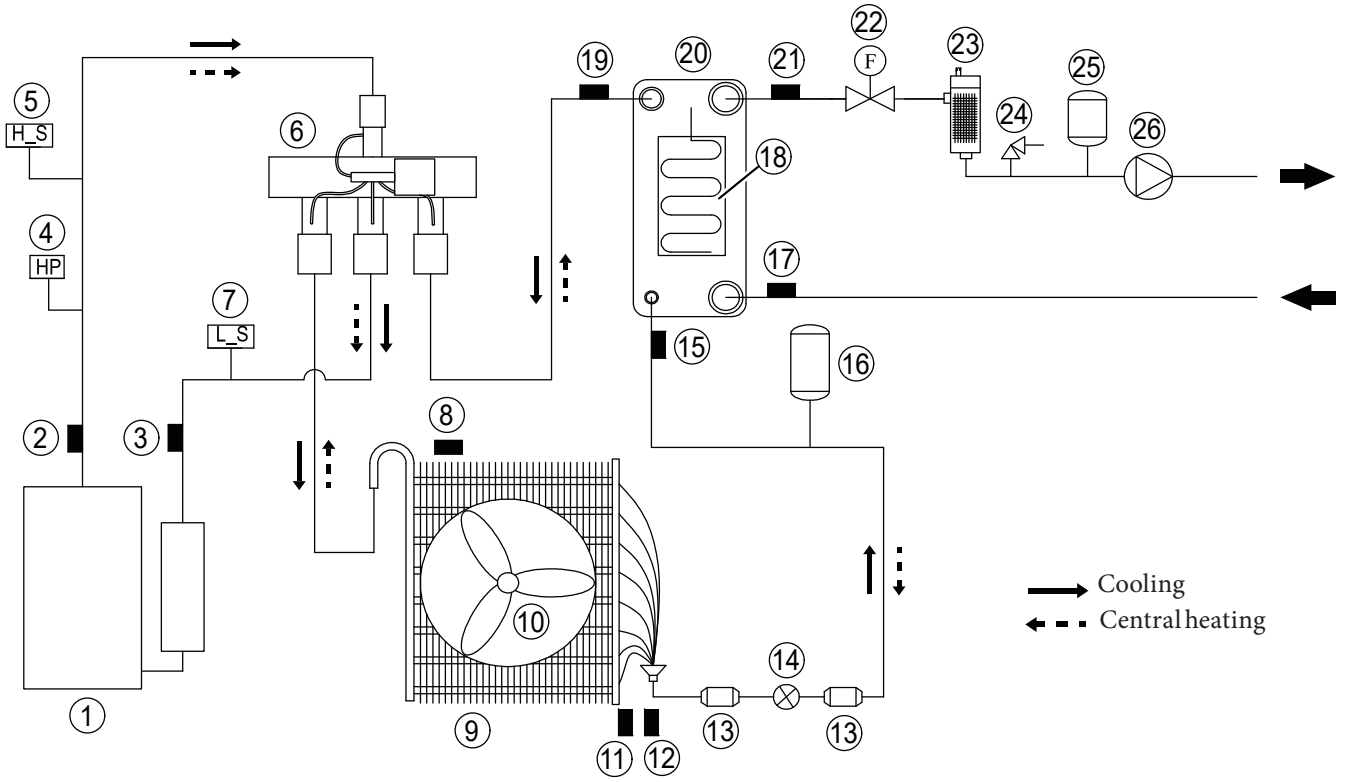

97

Key (Fig. 97):

1 - Compressor
2 - Temperature sensor (compressor discharge)
3 - Temperature sensor (compressor suction)
4 - High-pressure switch
5 - High pressure sensor
6 - 4-way valve
7 - Low pressure sensor
8 - Temperature sensor (ambient)
9 - Heat exchanger
10 - Fan
11 - Temperature sensor (heat exchanger)
12 - Temperature sensor (heat exchanger refrigerant outlet: cooling)
13 - Filter
14 - Electronic expansion valve
15 - Temperature sensor (plate heat exchanger refrigerant inlet: cooling)
16 - Liquid tank
17 - Temperature sensor (water inlet)
18 - Thermal tape (plate heat exchanger)
19 - Temperature sensor (plate heat exchanger refrigerant outlet: cooling)
20 - Plate heat exchanger
21 - Temperature sensor (water outlet)
22 - Flow sensor
23 - Expansion vessel
24 - Pressure relief valve
25 - Deaerator
26 - Water pump

Piping diagram MAGIS M8 V2-MAGIS M10 V2-MAGIS M12 V2-MAGIS M16 V2-MAGIS M12 T V2-MAGIS M16 T V2

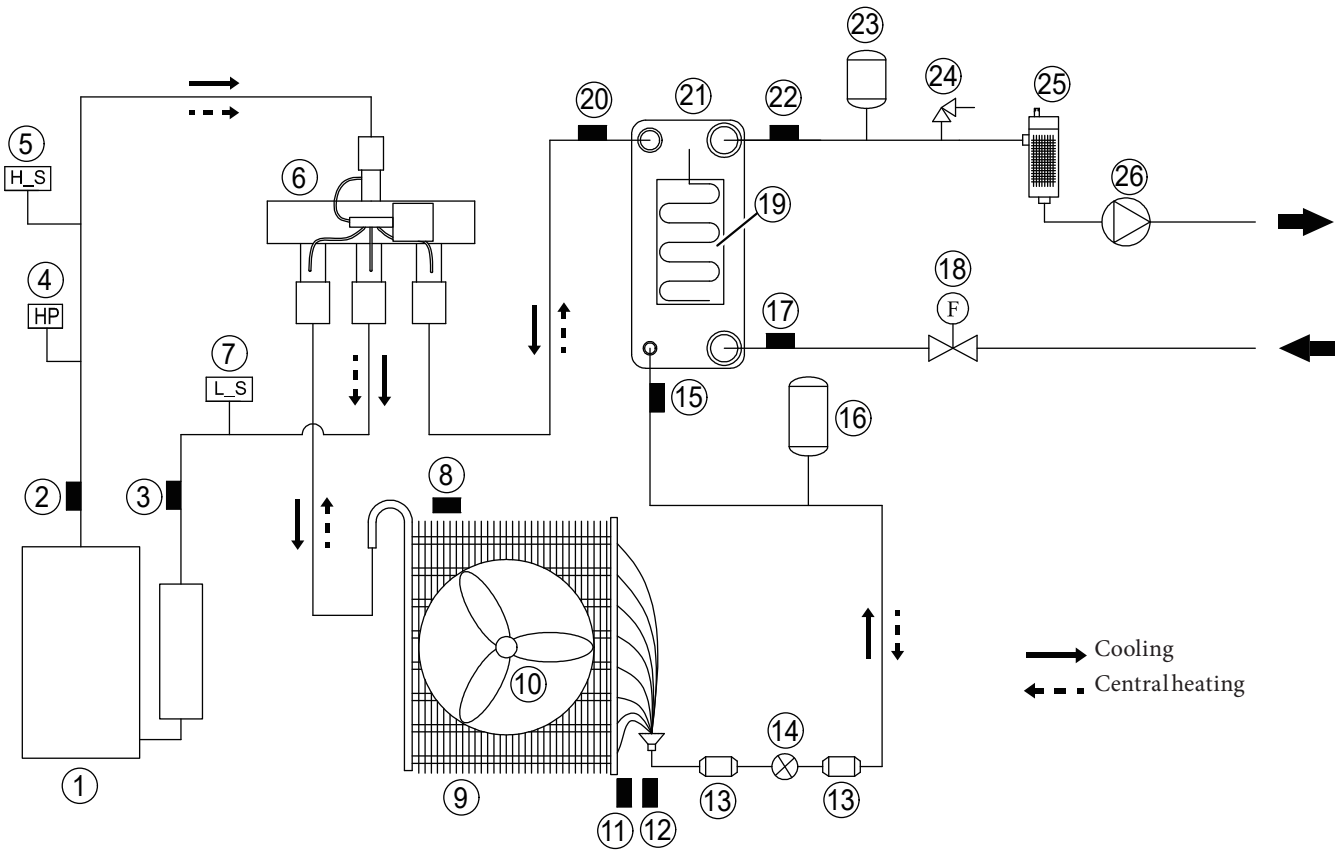

98

Key (Fig. 98):

1 - *Compressor*
2 - *Temperature sensor (compressor discharge)*
3 - *Temperature sensor (compressor suction)*
4 - *High-pressure switch*
5 - *High pressure sensor*
6 - *4-way valve*
7 - *Low pressure sensor*
8 - *Temperature sensor (ambient)*
9 - *Heat exchanger*
10 - *Fan*
11 - *Temperature sensor (heat exchanger)*
12 - *Temperature sensor (heat exchanger refrigerant outlet: cooling)*
13 - *Filter*
14 - *Electronic expansion valve*
15 - *Temperature sensor (plate heat exchanger refrigerant inlet: cooling)*
16 - *Liquid tank*
17 - *Temperature sensor (water inlet)*
18 - *Thermal tape (plate heat exchanger)*
19 - *Temperature sensor (plate heat exchanger refrigerant outlet: cooling)*
20 - *Plate heat exchanger*
21 - *Temperature sensor (water outlet)*
22 - *Flow sensor*
23 - *Expansion vessel*
24 - *Pressure relief valve*
25 - *Deaerator*
26 - *Water pump*

1.20 WIRING DIAGRAMS

Electrical wiring overview

The following illustration provides an overview of the field wiring required between the various components.

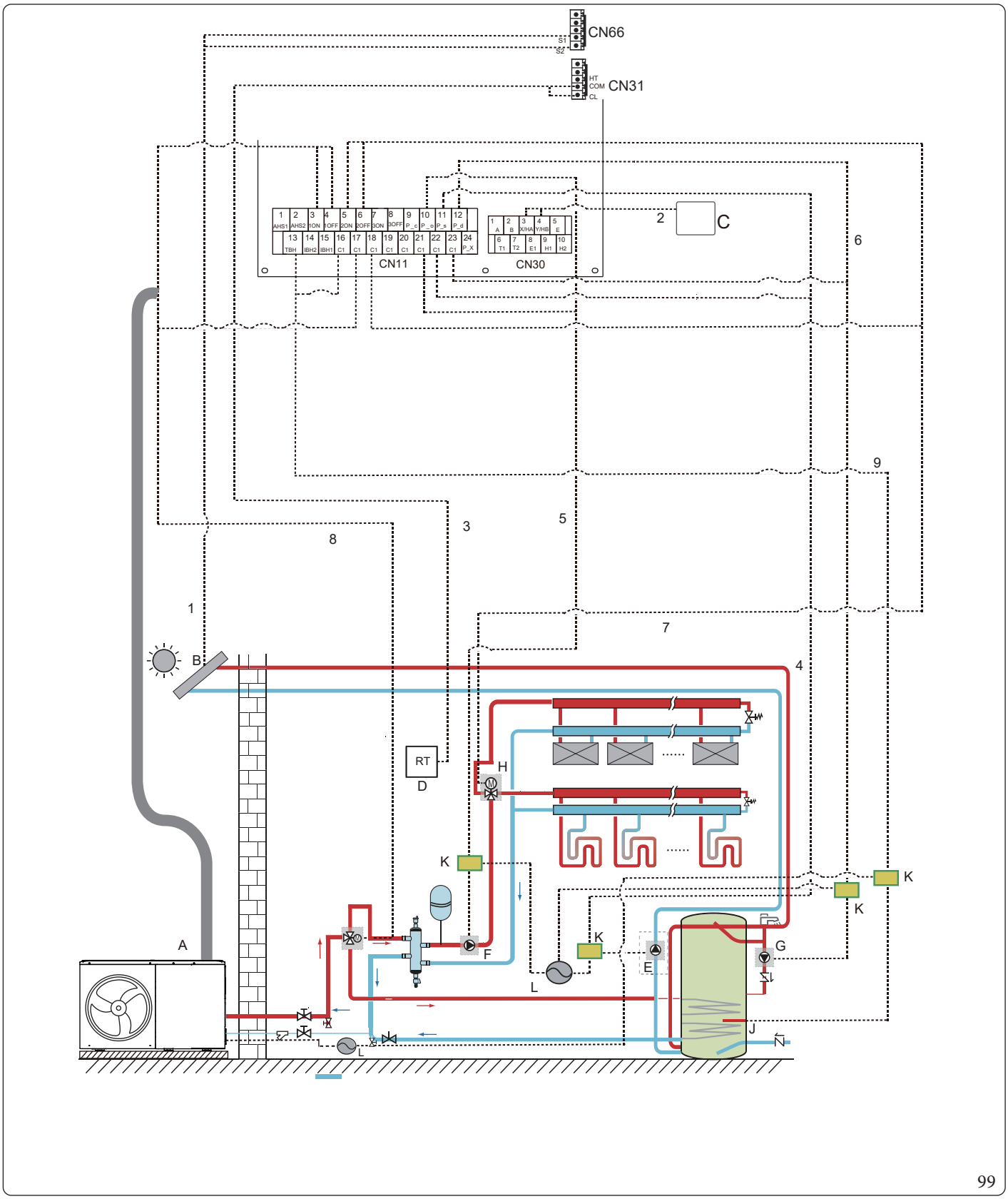

99

Code	Assembly unit	Code	Assembly unit
A	Main unit	G	P_d: DHW pump (field-supplied)
B	Solar energy kit (field-supplied)	H	SV2: 3-way valve (field-supplied)
C	Wired controller	I	SV1: 3-way valve for DHW tank (field-supplied)
D	Low-voltage room thermostat (field-supplied)	J	Tank booster heater
E	P_s: Solar pump (field-supplied)	K	Contactor
F	P_o: External circulation pump (field-supplied)	L	Power supply

Element	Description	CA/CC	Number of conductors required	Maximum operating current
1	Solar energy kit signal cable	CA	2	200 mA
2	Wired controller cable	CA	2	200 mA
3	Room thermostat cable	CA	2	200* mA
4	Solar pump control cable	CA	2	200* mA
5	External circulation pump control cable	CA	2	200* mA
6	DHW pump control cable	CA	2	200* mA
7	SV2: 3-way valve control cable	CA	3	200* mA
8	SV1: 3-way valve control cable	CA	3	200* mA
9	Tank electric heater control cable	CA	2	200* mA

Main control board

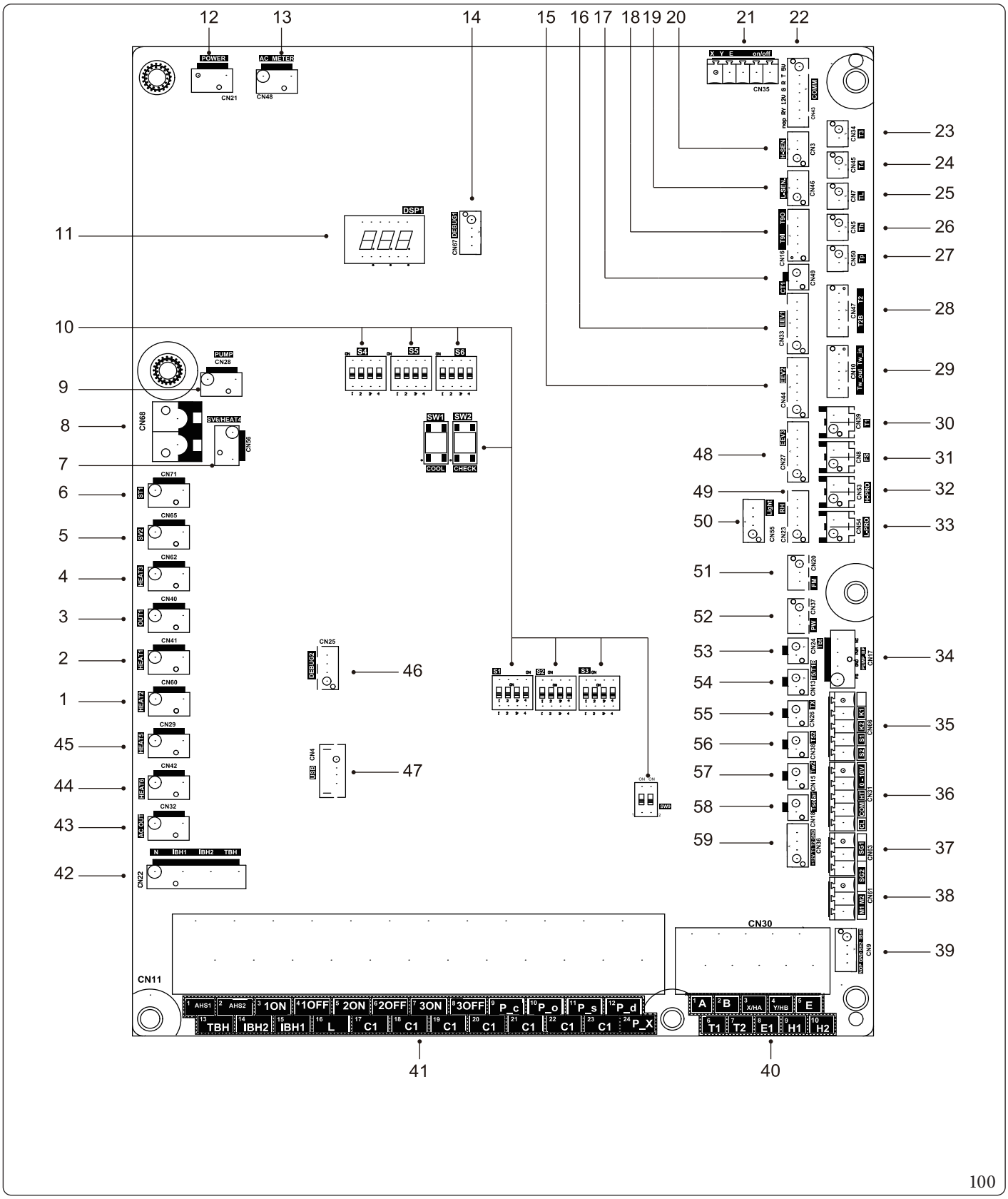

Order	Port	Stamp	Explanation	Port voltage
1	CN60	HEAT2	Reserved	
2	CN41	HEAT1	Reserved	230 V CA
3	CN40	OUT1	OUT1	230 V CA
4	CN62	HEAT3	Port for base heating tape	230 V CA
5	CN65	SV2	Reserved	
6	CN71	SV1	Port for 3-way valve	230 V CA
7	CN56		Port for bottom plate heating tape	230 V CA
8	CN68		Port for drain outlet heating tape	230 V CA
9	CN28	POMPA	Variable speed pump power input port	
10			DIP Switch	
11	DSP1		Digital display	
12	CN21	ALIMENTAZI-ONE	Power supply port	230 V CA
13	CN48	MISURATORE CA	Reserved	
14	CN67	DEBUG1	Port for IC program	
15	CN44	EEV2	Connection for electric expansion valve 2	
16	CN33	EEV1	Port for electric expansion valve 1 (Reserved)	0-12 V CA
17	CN49	CT1	Port for current transformer	
18	CN16	T9O/T9I	Reserved	
19	CN46	L-SEN	Connection for low-pressure sensor	0-5 V CC
20	CN33	H-SEN	Connection for high-pressure sensor	0-5 V CC
21	CN35	RS485	Reserved	0-5 V CC
		on/off	Reserved	0-5 V CC
22	CN43	COMM	Port for communication with inverter module	0-5 V CC
23	CN34	T3	Port for temperature sensor T3	0-3,3 V CC
24	CN45	T4	Port for temperature sensor T4	0-3,3 V CC
25	CN71	TL	Port for temperature sensor TL	0-3,3 V CC
26	CN56	Th	Port for temperature sensor Th	0-3,3 V CC
27	CN50	Tp	Port for temperature sensor Tp	0-3,3 V CC
28	CN47	T2	Port for refrigerant liquid side temperature sensors (heating mode)	0-5 V CC
		T2B	Port for refrigerant gas side temperature sensors (cooling mode)	0-5 V CC
29	CN10	TW_in	Port for inlet water temperature sensors of plate heat exchanger	0-5 V CC
	CN10	TW_out	Port for outlet water temperature sensors of plate heat exchanger	0-5 V CC
30	CN39	T1	Port for final water outlet temperature sensors	0-5 V CC
31	CN8	FS	Flow switch port	0-12 V CA
32	CN53	H-PRO	Port for high pressure switch (Reserved)	
33	CN54	L-PRO	Port for low pressure switch (Reserved)	
34	CN17	PUMP_bp	Port for variable speed pump communication	0-5 V CC
35	CN66	K1,K2	Input port (reserved)	0-5 V CC
		S1,S2	Input port for thermal solar system	0-5 V CC
36	CN31	0 ~ 10 V	Output port for 0–10 V	0-5 V CC
		HT	Room thermostat control port (heating mode)	0-5 V CC

Order	Port	Stamp	Explanation	Port voltage
36	CN31	COM	Room thermostat power supply port	0-5 V CC
		CL	Room thermostat control port (cooling mode)	0-5 V CC
37	CN63	SG1	Port for Smart Grid	0-12 V CA
		SG2	Port for Smart Grid	0-12 V CA
38	CN61	M1 M2	Port for remote switch	0-12 V CA
39	CN9		Control port for internal backup heater	0-5 V CC
40	CN30	1.2	Port for supplementary heat source	
		3.4	Port for communication with wired controller	
		6.7	Port for thermostat transfer board	
		9,10	Port for cascade unit	
41	CN11	1 2	Port for supplementary heat source	230 V CA
		3 4 16 17	Port for SV1 (3-way valve)	230 V CA
		5 6 16 18	Port for SV2 (3-way valve)	230 V CA
		7 8 16 19	Port for SV3 (3-way valve)	230 V CA
		9 20	Port for Zone 2 pump	230 V CA
		10 21	Port for external circulation pump	230 V CA
		11 22	Port for solar energy pump	230 V CA
		12 23	Port for DHW pump	230 V CA
		13 17	Control port for tank electric heater	230 V CA
		14 18	Control port for internal backup heater 1	230 V CA
		15 17	Control port for internal backup heater 2	230 V CA
		24 23	Defrost or alarm port	230 V CA
42	CN22	IBH1	Control port for internal backup heater 1	230 V CA
		IBH2	Control port for internal backup heater 2	230 V CA
		TBH	Control port for tank booster heater	230 V CA
43	CN32	USCITA CA	Transformer power supply input port	230 V CA
44	CN42	HEAT6	Port for electric anti-freeze heating tape (internal)	230 V CA
45	CN29	HEAT5	Port for electric anti-freeze heating tape (internal)	230 V CA
46	CN25	DEBUG2	Port for IC program	
47	CN4	USB	Port for USB program	
48	CN27	EEV3	Port for electric expansion valve 3	
49	CN23	RH	Port for humidity sensor	
50	CN55	Luce	Port for intermittent indicator light	
51	CN20	FM	Port for water flow sensor	0-5 V CC
52	CN37	PW	Connection for water pressure sensor	0-5 V CC
53	CN24	Tbt	Port for buffer tank temperature sensor	0-5 V CC
54	CN13	T5/T1B	Port for domestic hot water temperature sensor	0-5 V CC
55	CN26	TX	Reserved	
56	CN38	T5 2	Port for buffer tank temperature sensor 2	0-5 V CC
57	CN15	Tw2	Port for Zone 2 water outlet temperature sensor	0-5 V CC
58	CN18	Tsolar	Port for solar panel temperature sensor	0-5 V CC
59	CN36		Port for thermostat transfer board	0-12 V CA

Inverter moduleMAGIS M6 V2MAGIS M8 V2MAGIS M10 V2

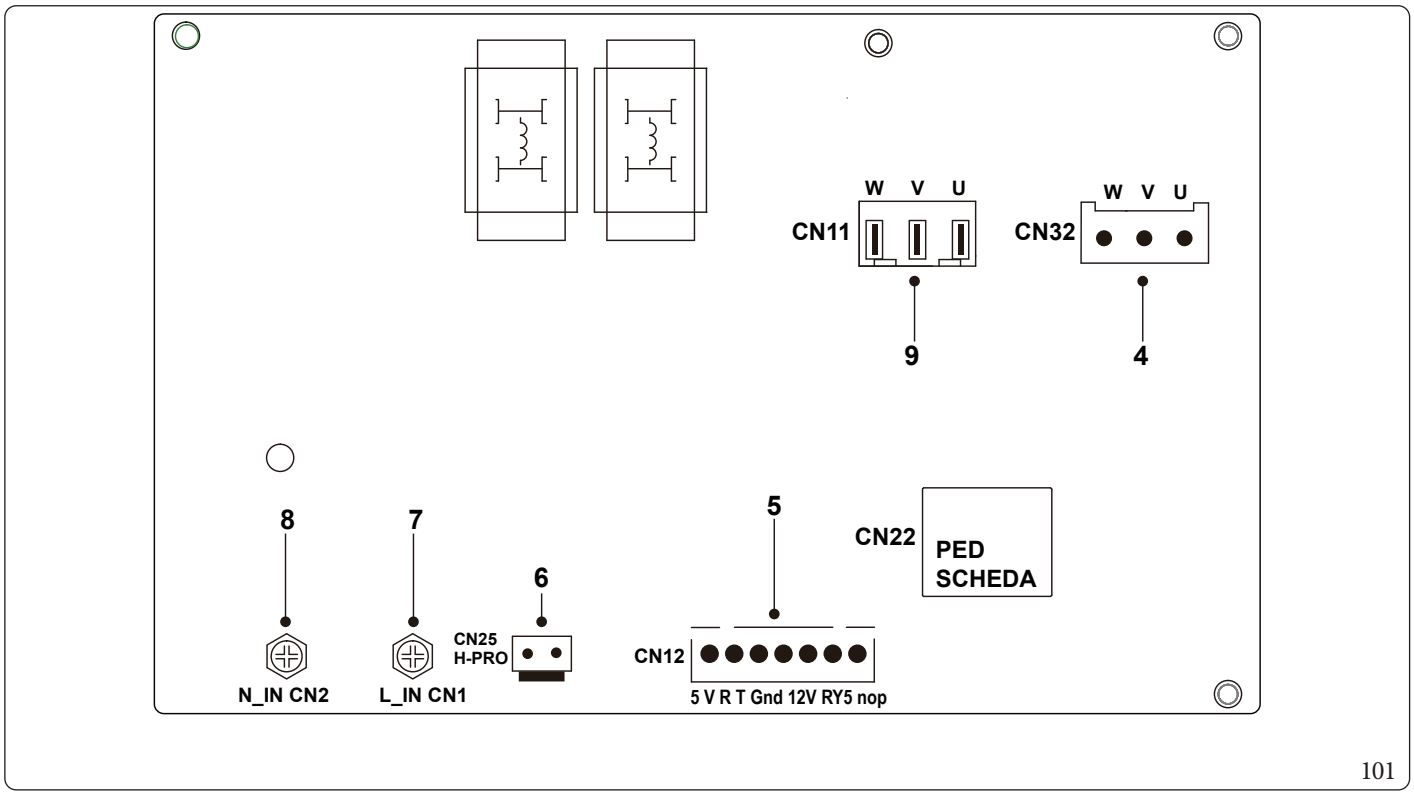

101

Inverter moduleMAGIS M12 V2MAGIS M16 V2(single-phase)

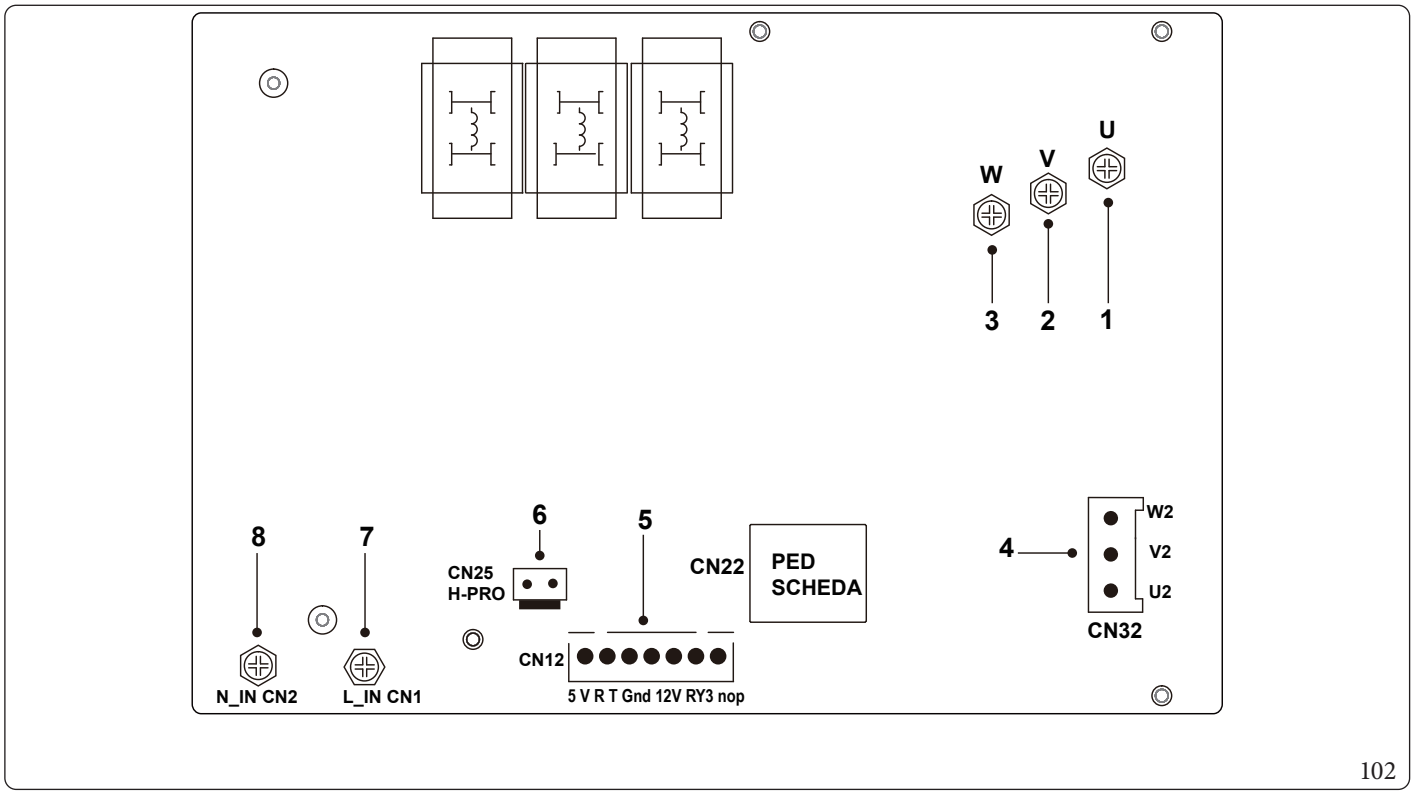

102

Order	Port	Stamp	Explanation	Port voltage
1	U		Inverter module U output power to compressor	Above 156 V DC (variable according to frequency)
2	V		Inverter module V output power to compressor	Above 156 V DC (variable according to frequency)
3	W		Inverter module W output power to compressor	Above 156 V DC (variable according to frequency)
4	CN32		DC fan power supply port	Above 156 V DC (variable according to frequency)
5	CN12		Port for communication with main control board	0-5 V DC
6	CN25	H-PRO	Connect to high-pressure switch	0-5 V DC
7	CN12	L_INGRES-SO	Inverter module L power input	230 V AC
8	CN2	N_INGRES-SO	Inverter module N power input	230 V AC
9	CN11		Inverter module output power to compressor	Above 156 V DC (variable according to frequency)

Inverter module MAGIS M12 T V2 MAGIS M16 T V2 (three-phase)

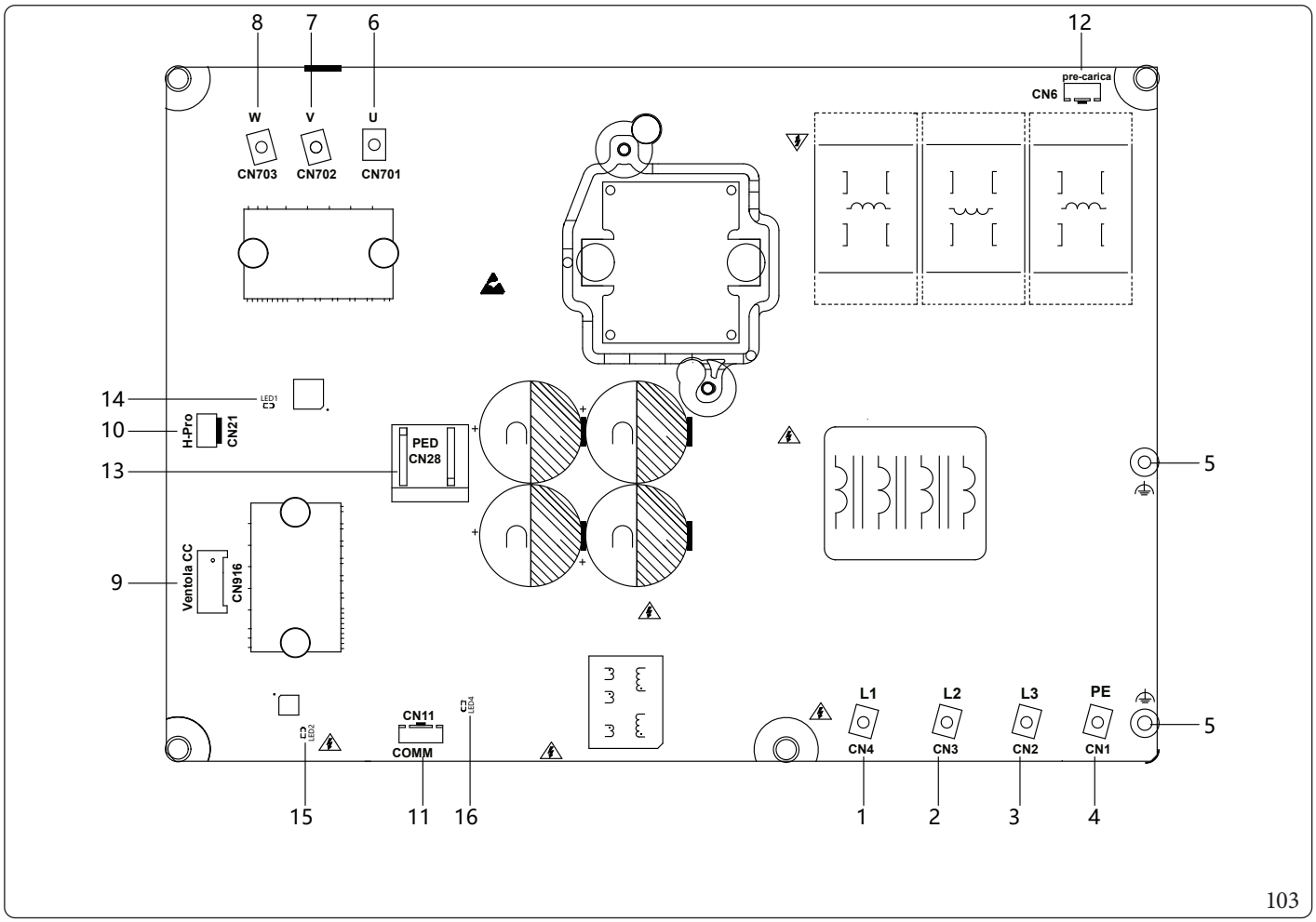

Order	Port	Stamp	Explanation	Port voltage
1	CN4	L1	L1 power supply input port (CN2)	phase to phase, rated 380 V AC
2	CN3	L2	L2 power supply input port (CN3)	phase to phase, rated 380 V AC
3	CN2	L3	L3 power supply input port (CN4)	phase to phase, rated 380 V AC
4	CN1	PE	Earthing	
5			Functional earth	
6	CN701	U	U compressor connection port (CN7001)	phase to phase 46–460 V AC
7	CN702	V	V compressor connection port (CN7002)	phase to phase 46–460 V AC
8	CN703	W	W compressor connection port (CN7003)	phase to phase 46–460 V AC
9	CN916	VENTOL-ACC	Fan port (CN916)	phase to phase 46–460 V AC
10	CN21	H-PRO	Port for high pressure switch (CN916)	Closed 0 V Open: 6 V
11	CN11	COMM	Port for communication with main control board (CN11)	From left to right: 5 V, +, –, earth
12	CN6	Pre-charge	Pre-charge relay control port (low power)	During operation: 12 V DC
13	CN28	PED	PED module (safety diagnostic module)	
14	LED1	COMP	Compressor status indicator	
15	LED2	VENTOL-ACC	Fan status indicator	
16	LED3	Power supply	5 V power supply status indicator	

1.21 CONFIGURATION

The unit must be configured by an authorised installer according to the installation environment (outdoor climate, installed options, etc.) and user requirements.
For the next step, follow the instructions given below.

1.21.1 Overview of DIP switch settings.

Setting of the function.

DIP switches S1, S2 and S3 are located on the main control board (see Ch. "Main control board" in paragraph 1.20 "Wiring diagrams").

Switch off power before making any changes to the DIP switch settings.

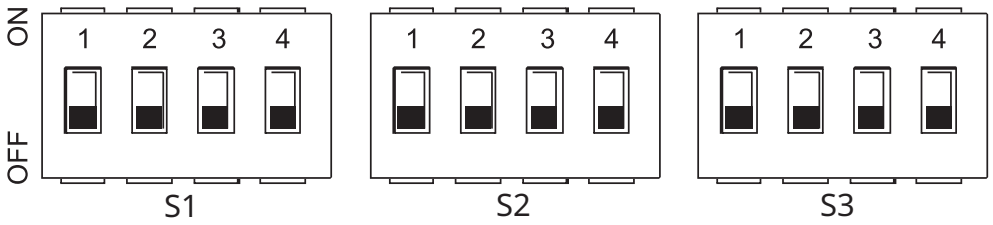

104

DIP Switch		ON=1	OFF=0	Default values
S1	1	Reserved		1: OFF
	2	0= Reserved 1= External electric heater		2: OFF
	3/4	0/0= IBH disabled 0/1= IBH heater active (with one-step control) 1/0= IBH heater active (with two-step control) 1/1= IBH heater active (with three-step control)		3: OFF 4: OFF

DIP Switch		ON=1	OFF=0	Default values
S2	1	Reserved		1: OFF
	2	Reserved		2: OFF
	3/4	0/0= Variable speed pump 1 0/1= Reserved 1/0= Reserved 1/1= Reserved		3: OFF 4: OFF

DIP Switch		ON=1	OFF=0	Default values
S3	1/2/3	0/0/0= Address no. 0 (Master unit) 1/0/0= Address no. 1 (Slave unit) 0/1/0= Address no. 2 (Slave unit) 0/0/1= Address no. 3 (Slave unit) 1/1/0= Address no. 4 (Slave unit) 1/0/1= Address no. 5 (Slave unit) 0/1/1= Address no. 6 (Slave unit – Reserved) 1/1/1= Address no. 7 (Slave unit – Reserved)		1: OFF 2: OFF 3: OFF
	4	Reserved		4: OFF

1.21.2 Pre-configuration checks

Before powering on the unit, check the following items:

☐	**Field Wiring:** Ensure that all electrical connections comply with the instructions provided in this instruction manual.
☐	**Fuses, circuit breakers or protective devices:** Verify their size and type in accordance with the instructions provided in this instruction manual. Make sure no fuses or protection devices have been bypassed.
☐	**Fuses, circuit breakers or protective devices:** Verify the size and type in accordance with the instructions provided in this instruction manual. Make sure no fuses or protection devices have been bypassed.
☐	**Internal Wiring:** Check the wiring and connections inside the electrical panel for any loose or damaged parts, including the earth wiring.
☐	**Mounting:** Check and ensure that the unit and the hydraulic circuit system are correctly installed to prevent water leaks, abnormal noise and vibrations during unit start-up.
☐	**Damaged appliance:** Check the components and pipework inside the unit for any damage or deformation.
☐	**Refrigerant leak:** Check the inside of the unit for any refrigerant leaks. If refrigerant leaks are detected, follow the instructions in the "Safety Precautions" section.
☐	**Supply voltage:** Check the power supply voltage. The voltage must match that indicated on the unit's identification label.
☐	**Air vent valve:** Ensure that the air vent valve is open (at least 2 turns).
☐	**Shut-off valve:** Make sure that the shut-off valve is completely open.
☐	**Sheet metal panels:** Ensure that all sheet metal panels of the unit are correctly fitted.
☐	**System water volume:** Ensure that the water volume in the system is within the specified limits.
☐	**Filter:** Make sure the filter is fitted correctly and clean.

After powering on the unit, check the following items:

☐	**When the unit is switched on, nothing is displayed on the wired controller:** Check for the following faults before diagnosing possible error codes: - Wiring connection fault (power supply or communication signal). - Fuse failure on the PCB.
☐	**Error code "E8" or "E0" displayed on the remote controller:** - Residual air in the system. - Insufficient water level in the system. Before starting the operational test, ensure that the hydraulic system and tank are filled with water and that air has been purged. Failure to do so may damage the pump or backup heater (optional). Make sure no fuses or protection devices have been bypassed.
☐	**Error code "E2" displayed on the wired remote controller:** - Check the wiring between the wired remote controller and the unit.
☐	**Initial start-up at low outdoor ambient temperature:** To perform initial start-up at low outdoor ambient temperature, the water must be heated gradually. Use the floor pre-heating function.

In the case of underfloor heating, the floor may be damaged if the temperature rises sharply within a short period of time. For further information, please contact the construction company.

1.21.3 Unit silent mode function

If the unit is too noisy at certain hours of the day, you can reduce the noise produced by the appliance by activating the noise reduction function during a specific time slot.

Reducing the noise level may reduce the power output of the appliance.

The function can activate different noise reduction levels.
For reduction levels, see paragraphs 5.1.1 "Power and sound pressure data (single-phase)" e 5.2.1 "Power and sound pressure data (three-phase)".
To activate and set the function, refer to paragraph "Silent mode" in chapter 3.4.4 "Settings".

1.21.4 Configuration

To initialise the unit, the installer must enter a set of advanced settings. The advanced settings are accessible in service mode.The complete list of advanced settings parameters is available in paragraph 3.10 "User settings parameters".

1.22 IMPLEMENTING

The operational test is used to confirm the correct functioning of the valves, air venting, circulation pump operation, cooling, heating and domestic hot water (DHW) production.
To carry out the operational test, the installer must access the advanced settings in technician mode.The test procedures are described in detail in paragraph 3.6 "Implementing".

Commissioning checklist

☐	Actuator operational test
☐	Air purging
☐	Operation test
☐	Minimum flow rate check

1.23 HANDOVER TO THE CUSTOMER

- Ensure that the user has the printed documentation and ask them to retain it for future reference.
- Clear the fault history in the HMI before handover to the user.
- It is strongly recommended to connect the unit via WLAN. Further information is available in the APP.
- Explain to the user how to use the system correctly and what to do in case of problems.
- Explain the user how to upkeep the unit. (see paragraph 4 "Maintenance and service.").
- Explain the user energy-saving tips (see paragraph 3.6.4 "Energy-saving tips").

2 USER INSTRUCTIONS

2.1 GENERAL RECOMMENDATIONS

For safety purposes, the user must carefully read all that is in this manual in the section under their competence and should any doubts arise, before taking any initiative, must ask the installer or their maintenance technician (such as for example Immergas authorised service centre).

The device can be used by children at least 8 years old as well as by persons with reduced physical, sensory or mental capabilities, or lack of experience or required knowledge, provided that they are under surveillance, or after they have been instructed relating to the safe use and have understood the potential dangers.
Children must not play with the appliance.
Cleaning and maintenance destined to be performed by the user can not be carried out by unsupervised children.

If temporary shutdown of the HP is required, proceed as follows:
a) drain the system if antifreeze is not used;
b) shut off the electrical and water supply.

Never clean the appliance or connected parts with easily flammable substances.

Do not open or tamper with the appliance.

Only use the user interface devices listed in this section of the booklet.

Do not climb on the appliance, do not use the appliance as a support base.

In the event of malfunctions, faults or incorrect operation, turn the appliance off and contact an authorised company (e.g. the Authorised Technical Assistance Centre, which has specifically trained staff and original spare parts).
Do not attempt to modify or repair the appliance alone.

**Water at a temperature of more than 50 °C can cause serious burns.
Always check the water temperature before any use.**

The temperatures indicated by the display have a tolerance of +/- 3°C due to environmental conditions that cannot be blamed on the appliance.

If you smell burning or see smoke coming out of the appliance, switch it off, disconnect power and call an authorised company (e.g. Authorised Technical Assistance Centre).

**At the end of its service life, the appliance must not be disposed of like normal household waste nor abandoned in the environment, but must be removed by a professionally authorised company as required by current legislation.
Contact the manufacturer for disposal instructions.**

The use of components involving use of electrical power requires some fundamental rules to be observed such as:

- **do not touch the appliance with wet or moist parts of the body;**
- **do not pull the electric cables;**
- **the appliance power cable must not be replaced by the user;**
- **in the event of damage to the cable, switch off the appliance and contact exclusively personnel professionally qualified pursuant to standards in force for its replacement;**
- **if the appliance is not to be used for a certain period, disconnect the main appliance external switch.**

2.2 CLEANING AND MAINTENANCE

To safeguard the integrity of the system and to keep its safety, performance and reliability features unchanged over time which distinguish the appliance, have maintenance carried out on a yearly basis (unless there are specific more stringent requirements due to the installation context and/or relevant legislation in force).

2.3 APPLIANCE SWITCH-OFF

Switch the appliance off by putting it in "off" mode and disconnect the main switch outside of the appliance.
Never leave the appliance switched on if left unused for prolonged periods.

2.4 PROLONGED INACTIVITY

In case of prolonged inactivity (e.g. second home), we recommend:
1. to switch off the power supply;
2. completely empty the CH circuit (to be avoided if glycol is present in the system). In systems that are drained frequently, filling must be carried out with suitably treated water to limit hardness that can cause lime-scale.

If the appliance is shut down for a long time, protect the machine from freezing by installing the antifreeze valve kit or adding glycol to the circuit.

2.5 CLEANING THE CASE

1. Use damp cloths and neutral detergent to clean the appliance casing.

Never use abrasive or powder detergents.

2.6 PERMANENT SHUTDOWN

Should the system be shut down permanently, have professional staff carry out the procedures, making sure that the electrical and water supply lines have been previously shut off.

3 CONTROL PANEL

3.1 USER INTERFACE

3.1.1 Names and functions

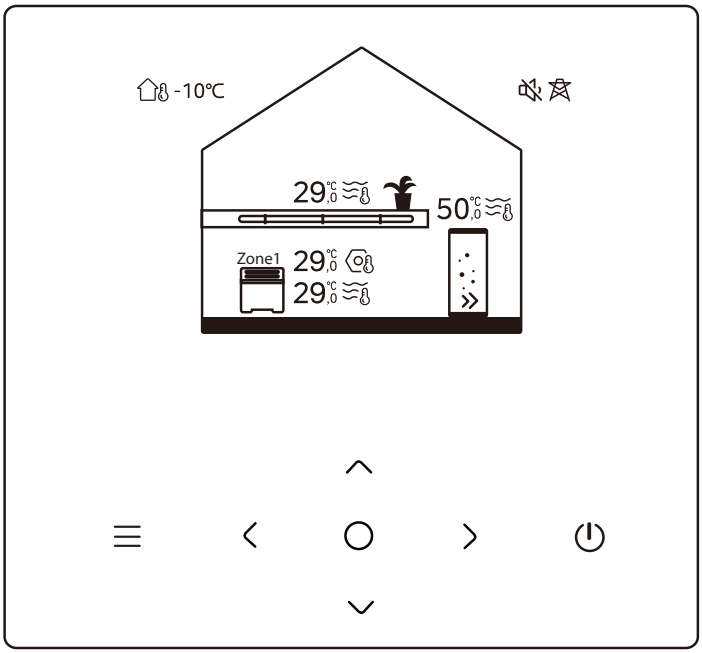

105

Icon	Name	Definition
	Menu/Back*	Press to access the menu page (from the home page) / to return to the previous page (from any page other than the home page)
	Confirm	Confirm a selection / Save settings / Go to the next page
	ON/OFF	Switch Zone 1 / Zone 2 / DHW on or off. Hold for 3 sec. to switch all appliances on or off (Zone 1 / Zone 2 / DHW).
	Navigation: up, down, left and right	Press to move the cursor and adjust settings (hold for 1 second to activate rapid adjustment)

* Hold for 2 seconds to return to the main page.

3.1.2 Interface navigation

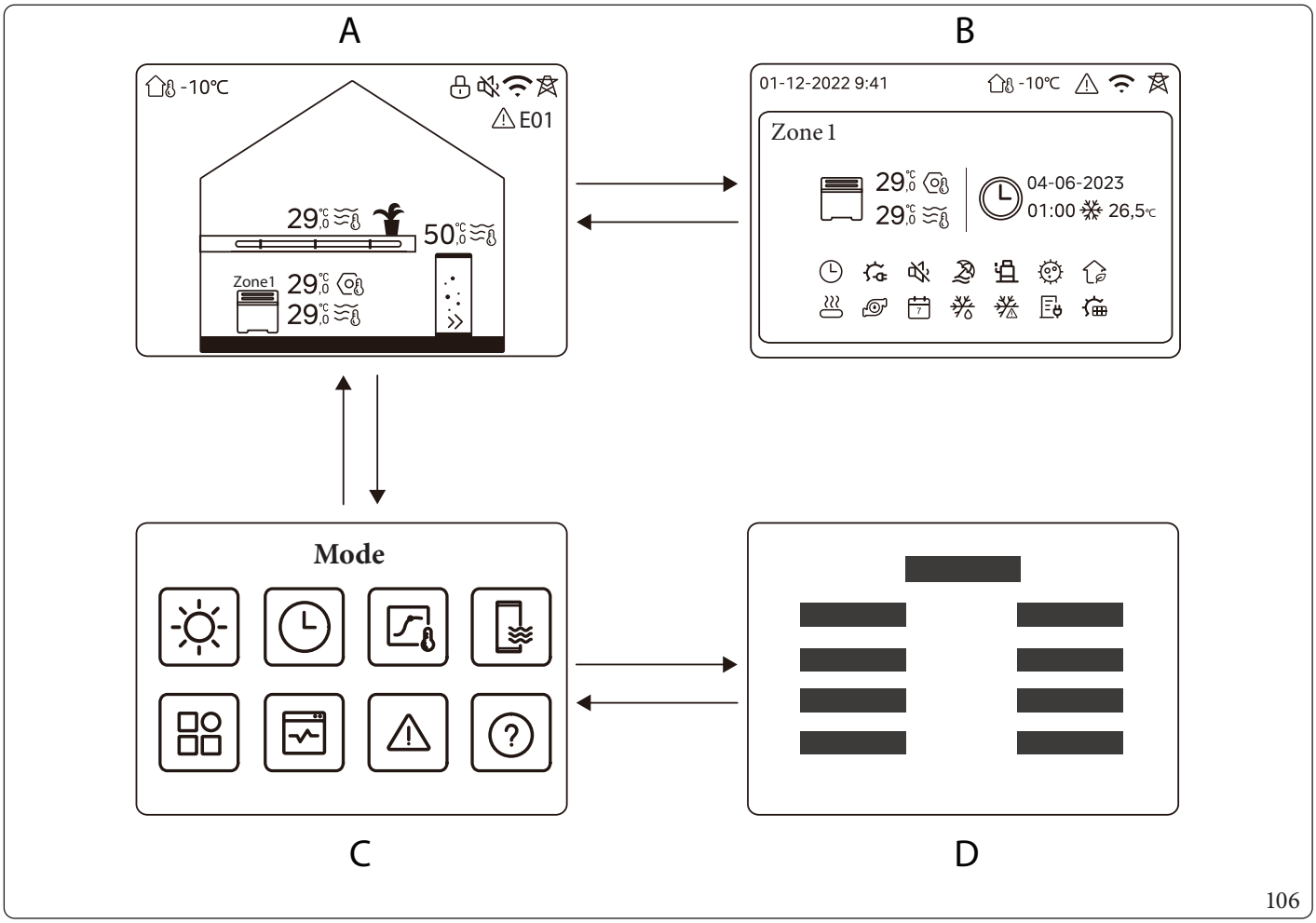

To navigate from page A to page B, first select a piece of appliance and press ○.
To navigate from page C to page D, first select a destination icon and press ○.
To navigate from page D to page C, press ☰ (multiple times depending on the page level).
Press ☰ to return to the previous page.

3.1.3 Interface layout

Page A – Home page

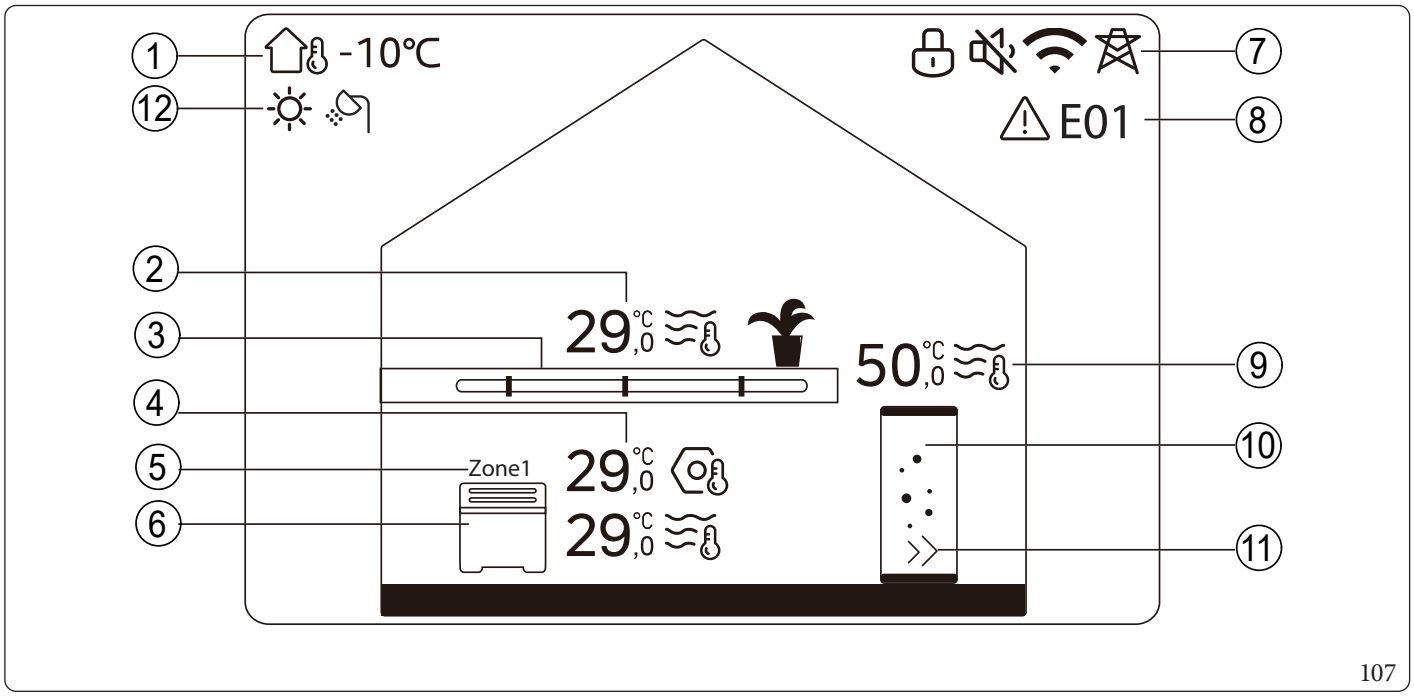

107

Number	Description		Icon	Notes
1	External room temperature		-10°C	Current outdoor ambient temperature
2*	Zone 2 temperatures	Temperature	29,0	The indicator lights up when Zone 2 is active and turns grey when Zone 2 is deactivated. When the temperature is controlled by ambient temperature, is displayed. When the temperature is controlled by water temperature, is displayed.
		Current room temperature		
		Current water temperature		
		Set temperature		
3*	Zone 2 appliances	Radiator		Displays , — or depending on the installer's program settings. The icon colour is orange when Zone 2 is in heating mode. The icon colour is blue when Zone 2 is in cooling mode. The icon colour is grey when Zone 2 is deactivated.
		Floor heating	—	
		Fan coil		
4	Zone 1 temperatures	Temperature	29,0 29,0	The indicator lights up when Zone 1 is active and turns grey when Zone 1 is deactivated. When the temperature is controlled by ambient temperature, is displayed. When the temperature is controlled by water temperature, is displayed. When Zone 1 is selected, the zone indicator and the set temperature are visible.

* Hidden if the DUAL ZONE mode is disabled.

Number	Description		Icon	Notes
4	Zone 1 temperatures	Current room temperature		The indicator lights up when Zone 1 is active and turns grey when Zone 1 is deactivated. When the temperature is controlled by ambient temperature, is displayed. When the temperature is controlled by water temperature, is displayed. When Zone 1 is selected, the zone indicator and the set temperature are visible.
		Current water temperature		
		Set temperature		
5	Zone 1 indicator		Zone 1	Indicates that this zone is Zone 1.
6	Zone 1 appliances	Radiator		Displays , or depending on the installer's program settings. The icon colour is orange when Zone 1 is in heating mode. The icon colour is blue when Zone 1 is in cooling mode. The icon colour is grey when Zone 1 is deactivated.
		Floor heating		
		Fan coil		
7	Block			Visible when the screen is locked.
	Silent mode			Visible when silent mode is active.
	WLAN connection			Visible during WLAN connection and after a successful WLAN connection.
	Smart grid			Visible when the smart grid function is active.
8	Error			Visible when a fault is present.
9**	DHW tank temperature	Temperature		The indicator lights up when DHW is active and turns grey when DHW is off. When the DHW option is selected, the set temperature is visible.
		Current water temperature		
		Set temperature		
10**	DHW tank			The icon colour is orange when DHW heating is active. The icon colour is grey when DHW heating is deactivated.
11**	Fast DHW			Visible when Fast DHW is active.
12	Current operating mode	Central heating		The indicator lights up when heating mode is running.
		Cooling		The indicator lights up when cooling mode is running.
		DHW		The indicator lights up when DHW mode is running.

* Hidden if the DHW mode is disabled.

Page B - Appliance page

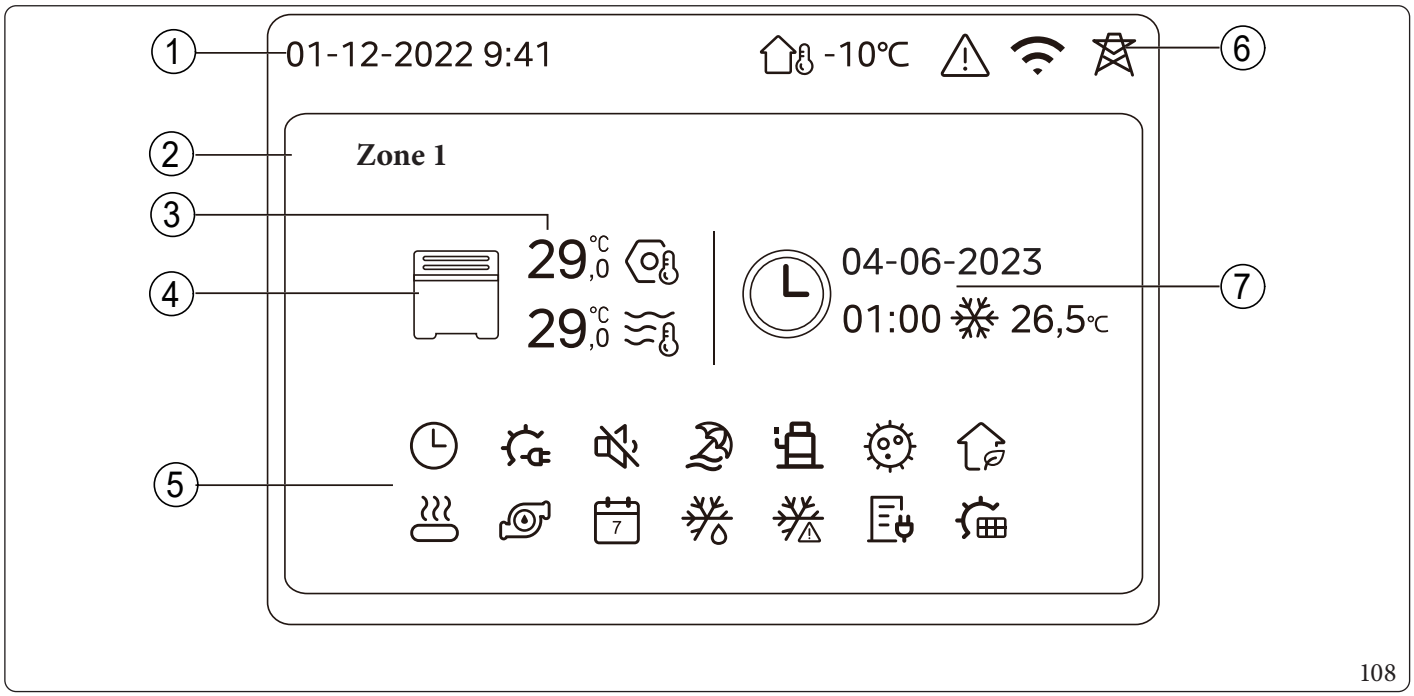

Number	Name		Icon	Notes
1	Date		01-12-2022	Current date (DD-MM-YYYY) and time (HH:MM) of the wired controller.
	Time		9:41	
2	Zone indicator		Zona1	Displays 1 or 2 depending on the selected zone.
3	Temperature		29,0°C 29,0°C	When the temperature is controlled by ambient temperature, is displayed. When the temperature is controlled by water temperature, is displayed.
	Current room temperature			
	Current water temperature			
	Set temperature.			
4	Appliances	Radiator		Displays , — or depending on the installer's program settings. The icon colour is orange when Zone 1 is in heating mode. The icon colour is blue when Zone 1 is in cooling mode. The icon colour is grey when Zone 1 is deactivated.
		Floor heating	—	
		Fan coil		

5	Electric heater			Visible if an electric heater is active.
	Daily timer			Visible if the daily timer is active.
	Silent mode			Visible when silent mode is active.
	Holiday mode			Visible when holiday mode is active.
	Compressor			Visible when the compressor is running.
	Water pump			Visible when the integrated water pump is running.
	Energy saving mode			Visible when ECO mode is active.
	Anti-freeze			Visible when the anti-freeze function is active.
	Defrosting			Visible when the defrost function is active.
	Auxiliary heat source			Visible when an auxiliary heat source is active.
	Power grid			Visible when the smart grid function is active and the input signal is the power grid.
	Peak electricity			Visible when the smart grid function is active and the input signal is peak electricity.
	Green electricity			Visible when the smart grid function is active and the input signal is free electricity.
	Solar			Visible when the solar heating function is active.
	Disinfect			Visible when the Disinfection function is active.
	Weekly timer			Visible when the weekly timer is active.
6	External room temperature			Current outdoor ambient temperature.
	Error			Visible when a fault is present.
	WLAN connection			Visible during WLAN connection and after a successful WLAN connection.
	Smart grid			Visible when the smart grid function is active.
7	Timer indicator	Timer icon		Displays the most recent timer information (for the schedule timer only). When no timer is active, "---" is displayed.
		Timer time	1899-12-31	
		Timer date	2023-06-04	
		Set the timer operating mode.		
		Timer temperature setting.	26.5 °C	

Page C - Menu page

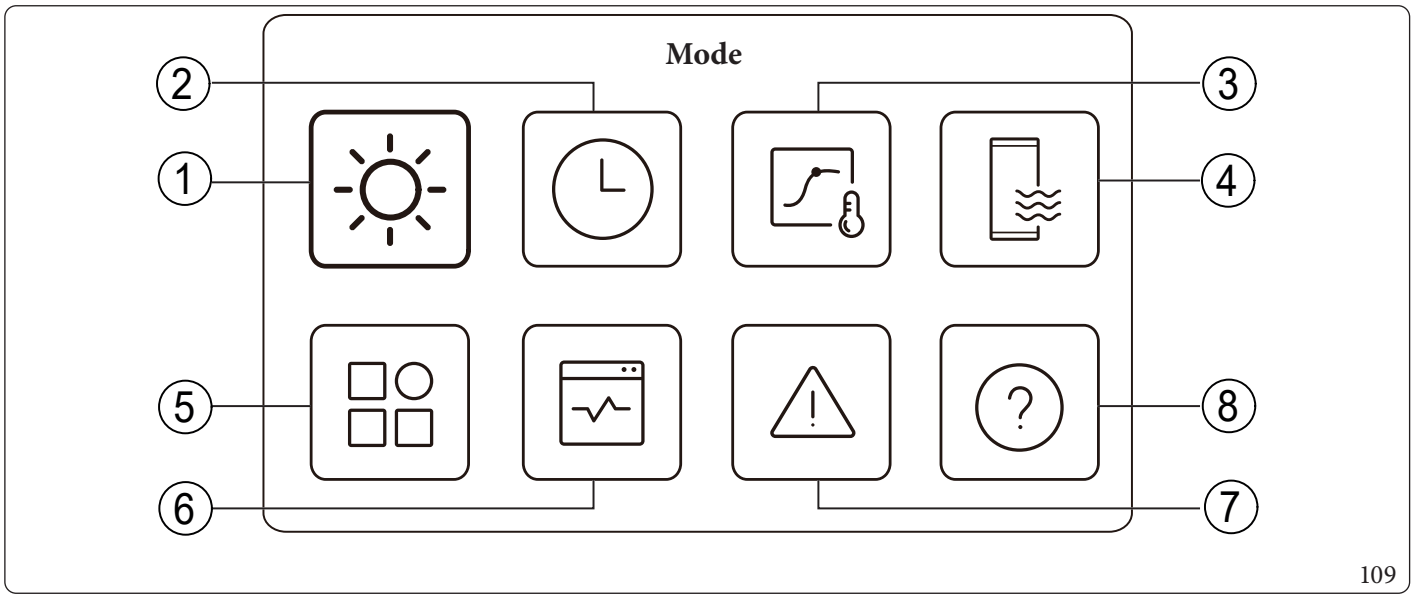

109

Number	Name	Icon	Notes
1	Mode		Set the operating mode of the unit.
2	Schedule		The system operates according to a schedule.
3	Weather temp. settings		Allows the water temperature to be adjusted based on the outdoor ambient temperature.
4	DHW setting		DHW settings.
5	Settings		General settings.
6	Unit status		Further information on the unit and its operating status.
7	Error info.		Fault history.
8	FAQ		FAQ assistance - frequently asked questions.

Page D - Settings and information page

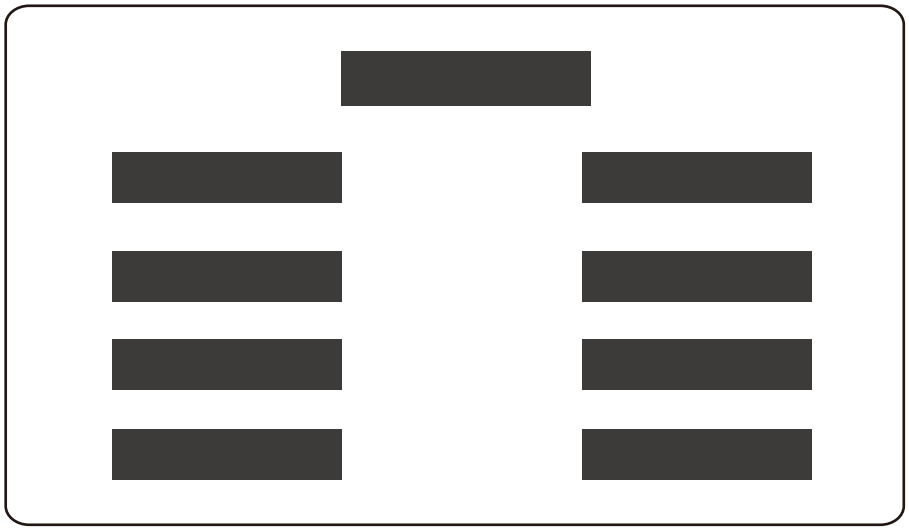

110

The page layout varies depending on the selection made. This is either a settings page where parameters can be adjusted, or an information page that provides additional information only.

3.2 INTERFACE MAP

3.2.1 User menu interface

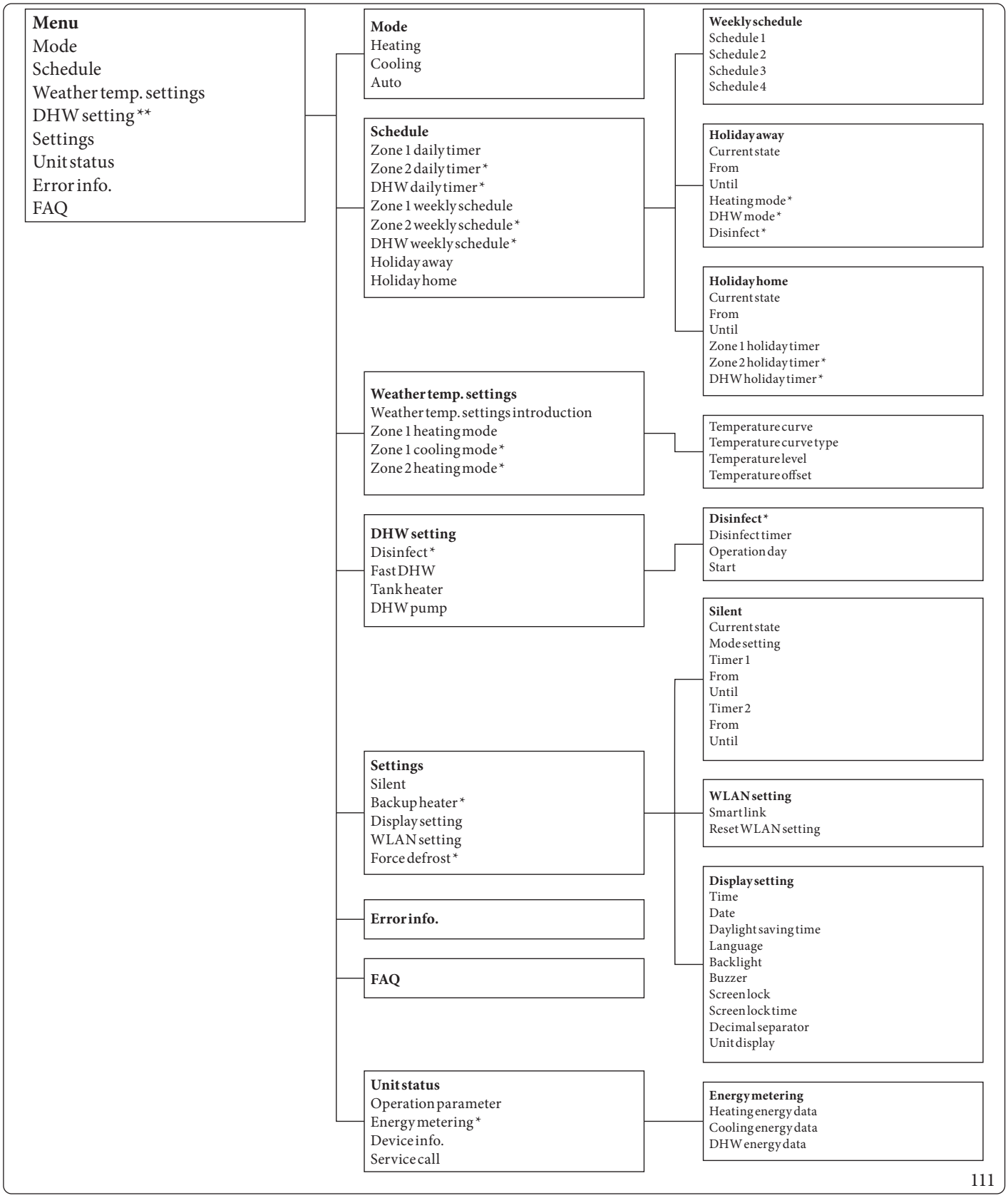

(*) Hidden if the corresponding function is disabled.
(**) The layout may differ if the corresponding function is disabled or enabled.There are other items that are hidden if the corresponding function is disabled or unavailable.

3.2.2 Service menu interface

For serviceman
DHW settings
Cooling setting
Heating setting
Auto mode setting
Temp. type setting
Room thermostat setting
Other heat source
Service call
Restore factory settings
Test run
Preheating for floor
Auto restart
Power input limitation
Input definition
Cascade setting
HMI address setting
Common setting
Clear energy data
Intelligent function settings
Alarm reset

DHW setting
DHW mode
Disinfect
DHW priority
Pump_D
DHW priority time set
dT5_ON
dT1S5
T4DHWMAX
T4DHWMIN
T5S_Disinfect
t_DI_HIGHTEMP.
t_DI_MAX
t_DHWHP_Restrict
t_DHWHP_MAX
Pump_D timer
Pump_D running time
Pump_D disinfect

Cooling setting
Cooling mode
t_T4_Fresh_C
T4CMAX
T4CMIN
dT1SC
dTSC
Zone 1 C-emission

Heating setting
Heating mode
t_T4_Fresh_H
T4HMAX
T4HMIN
dT1SH
dTSH
Zone 1 H-emission
Zone 2 H-emission
Force defrost

Auto mode setting
T4AUTOCMIN
T4AUTOHMAX

Temp. type setting
Temp. type setting
Water flow temp.
Room temp.
Double zone

Room thermostat setting
Room thermostat
Mode set priority

HMI address setting
HMI address for BMS
Stop BIT

Common setting
t_Delay pump
t1_Antilock pump
t2_Antilock pump run
t1_Antilock SV
t2_Antilock SV run
Ta-adj.
Pump_I silent output
Energy metering
Pump_O
Glycol
Glycol concentration
Pump_I minimum output

Other heat source
IBH function
dT1_IBH_ON
t_IBH_Delay
T4_IBH_ON
P_IBH1
P_IBH2
TBH function
dT5_TBH_OFF
t_TBH_Delay
T4_TBH_ON
P_TBH
Solar function
Solar control
Deltatsol

Service call
Phone number
Mobile number

Restore factory settings

Test run

Preheating for floor
Preheating for floor
Floor drying up

Auto restart
Auto restart cooling/heating mode
Auto restart DHW mode

Power input limitation

Input definition
M1 M2
Tbt
P_X port
Mixing valve SV3
Mixing valve SV3 adjustment
Anti-freeze valve

Cascade setting
PER_START
TIME_ADJUST

Clear energy data

Intelligent function settings
Energy correction
Sensor backup setting
Smart grid
Power limitation setting

Alarm reset

112

3.3 BASIC OPERATION

3.3.1 Screen lock/unlock

The screen dims after 30 seconds of inactivity and switches off after a further 10 seconds.
To lock or unlock the screen, hold < and > simultaneously for 1.5 seconds.

3.3.2 Switching the unit on/off

Select an appliance (icon 3, 6 or 10, Fig. 107) on page A and press ⏻ to switch the selected appliance on or off.

Appliance colour on the wired controller	Appliance status
Dark grey	OFF
Light orange	ON (heating mode)
Sky blue	ON (cooling mode)

3.3.3 Temperature settings

Select an appliance and press ^ and v to adjust the set temperature.
Adjustment of the set temperature is possible regardless of the status of the appliance.

3.3.4 Changing mode

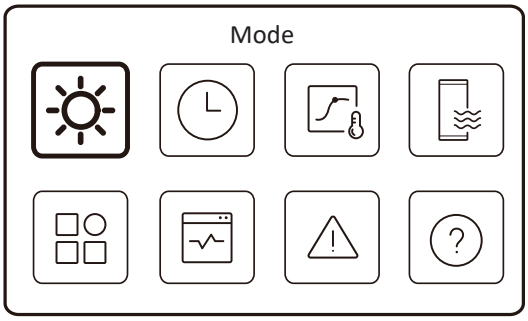

113

Access icon 1 on page C (Fig. 113) to change the operating mode

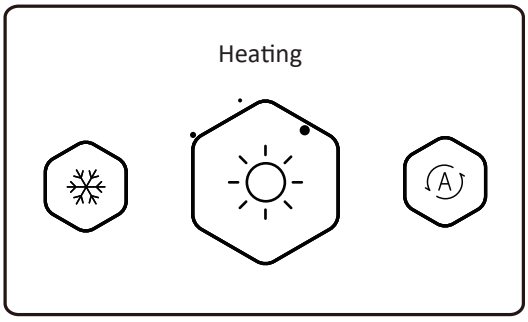

114

Press < or > to change the operating mode.
Three optional modes are available: Heating, Cooling and Auto.

Information on Auto mode: The unit automatically selects the operating mode based on the outdoor ambient temperature and certain advanced installer settings.

When the unit operates in different modes, the interfaces are displayed as follows.

Heating:

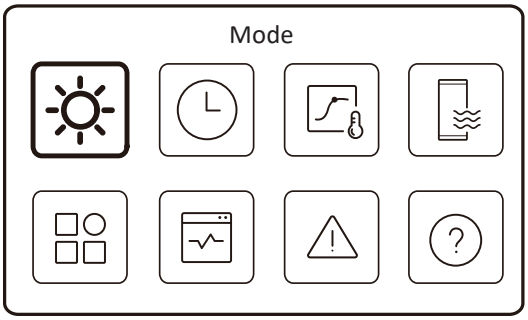

115

Cooling:

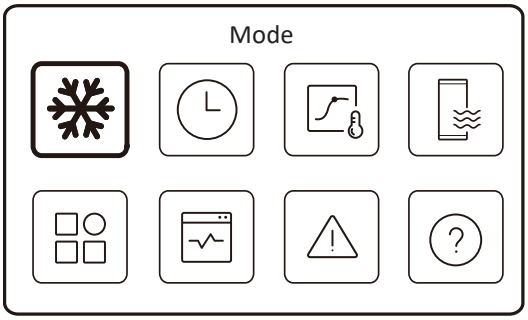

116

AUTO:

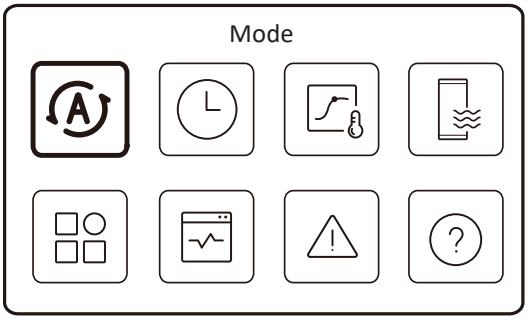

117

3.4 OTHER FUNCTIONS AND SETTINGS

The settings and operating guide for icons 2, 3, 4, 5, 6, 7 and 8 on page C (Fig. 109) are described below.

The icon below is the status indicator:
means inactive and means active

3.4.1 Schedule

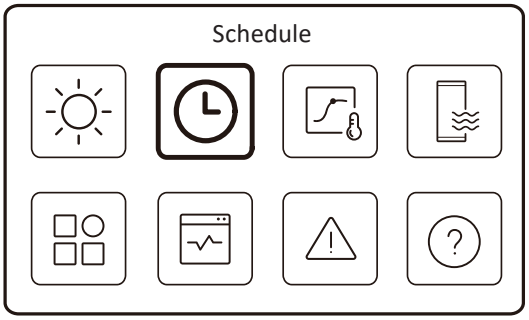

118

The operating schedule of the unit can be programmed.

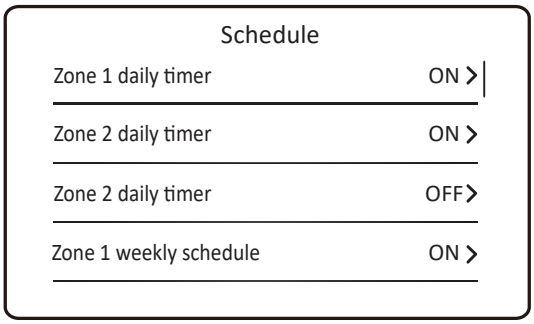

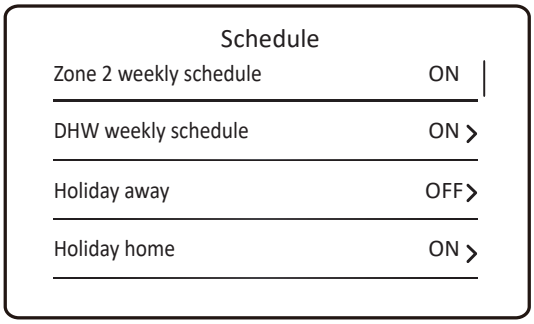

119

The status indicator on the right of the interface shows "ON" when the setting is active and "OFF" when the setting is inactive.

Fewer items than those shown above may be visible. The number of visible items depends on the actual application.
This function is based on the current time displayed on the wired controller. Ensure that the time is correct.

Zone 1 daily timer

For the Zone 1 daily schedule, 4 parameters can be set.Up to 6 commands can be set.

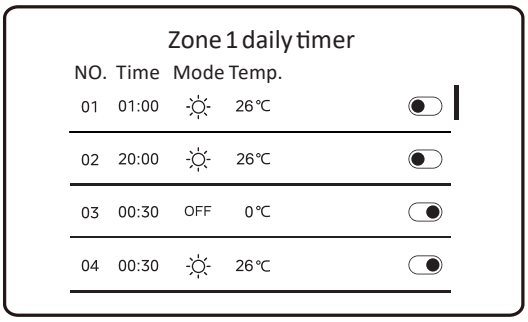

120

Time	The time at which the unit begins executing the following command.
Mod.	The mode in which the unit starts operating from the set time. OFF means that Zone 1 switches off at the set time.
Temp	The target temperature of the unit in the set mode.
Status	The status of the schedule setting. If no timer is active, the Zone 1 daily timer is inactive.

Daily schedule: Commands repeat every day.

Zone 2 daily timer

For the Zone 2 daily schedule, follow the instructions for Zone 1.This item is hidden if the DUAL ZONE option is disabled.

DHW daily timer

For the DHW daily schedule, follow the instructions for Zone 1.This item is hidden if the DHW option is disabled.

Zone 1 weekly schedule

For the Zone 1 weekly schedule, up to 4 schedules can be set.

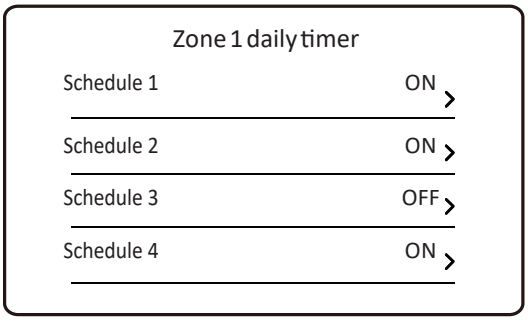

121

OFF: Commands repeat every week.

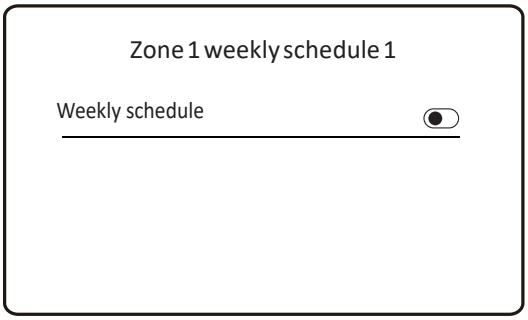

122

Press ○ to view the interface below.

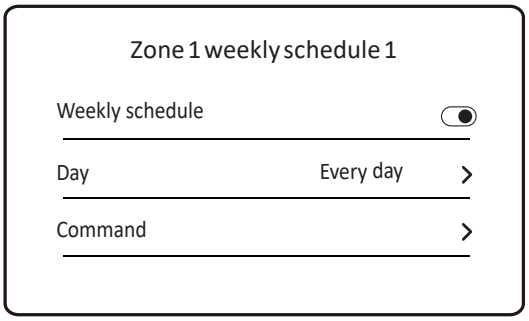

123

Day:

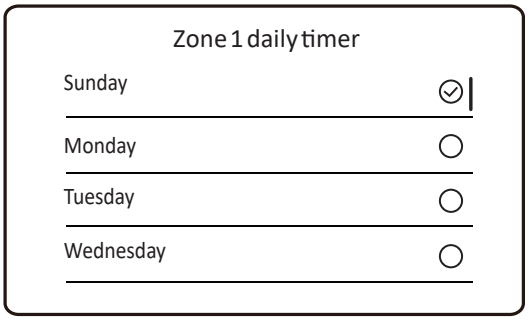

124

Command:

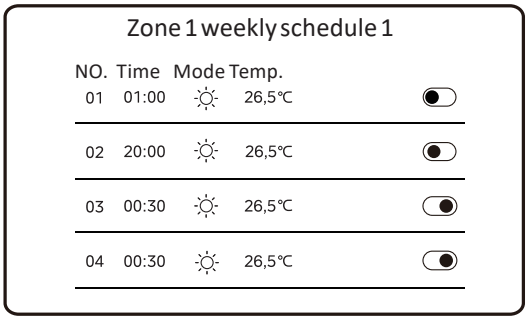

125

Weekly schedule	Indicates the status of the weekly schedule.
Day	The day on which the following command is active within a week. At least one day must be selected.
Command	Refer to Zone 1 daily timer

Zone 2 weekly schedule

For the Zone 2 weekly schedule, follow the instructions for Zone 1.This item is hidden if the DUAL ZONE option is disabled.

DHW weekly schedule

For the DHW weekly schedule, follow the instructions for Zone 1.This item is hidden if the DHW option is disabled.

Away-from-home holiday mode

Programme for the holidays, ensuring a mild temperature at the residence to prevent freezing.

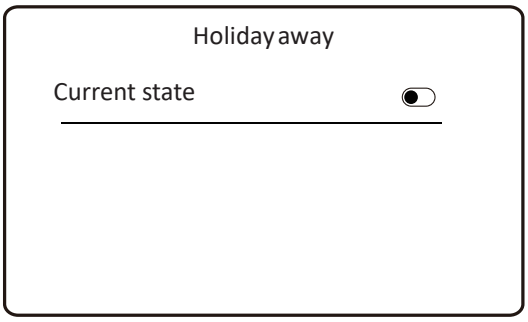

126

Press ○ to view the interface below.

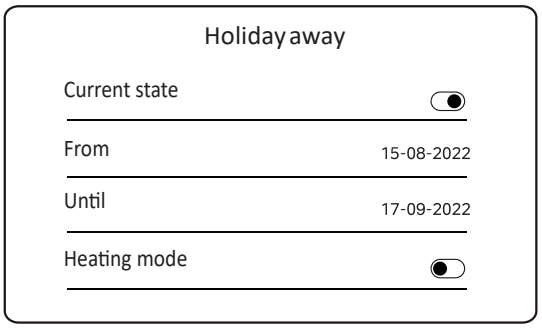

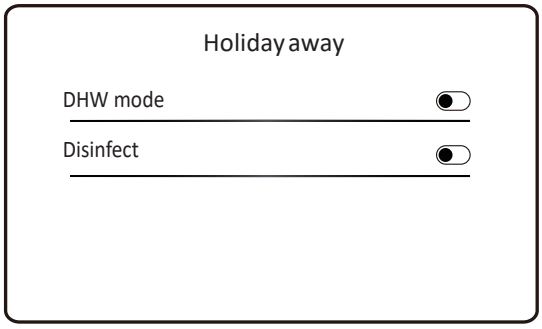

127

Current state	Indicates the status of away-from-home holiday mode.
From	The day on which away-from-home holiday mode starts (00:00 on that day)
Until	The day on which away-from-home holiday mode ends (00:00 on that day)
Heating mode *	Indicates the status of heating mode.
Heating temp. *	The target temperature of the unit in heating mode.
DHW mode **	Indicates the status of DHW heating mode.
DHW temp. **	The target temperature of the unit in DHW heating mode.
Disinfect ***	Indicates the status of the disinfection function.

* Hidden if heating mode is inactive.
** Hidden if DHW mode is inactive.
*** Hidden if DHW mode or disinfection are inactive.

Fewer items than those shown above may be visible. The number of visible items depends on the actual application.
To exit away-from-home holiday mode early:
when away-from-home holiday mode is active, press any button on the wired controller. A confirmation page is then displayed.

At-home holiday mode

If the user stays at home during the holidays, a customised schedule can be created.

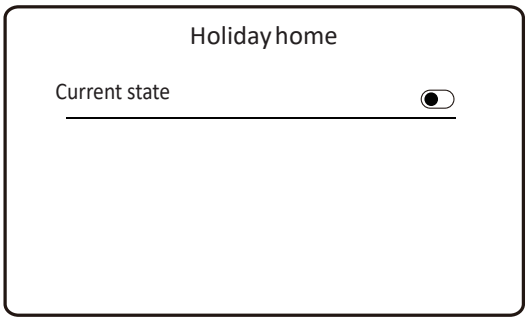

128

Press ○ to view the interface below.

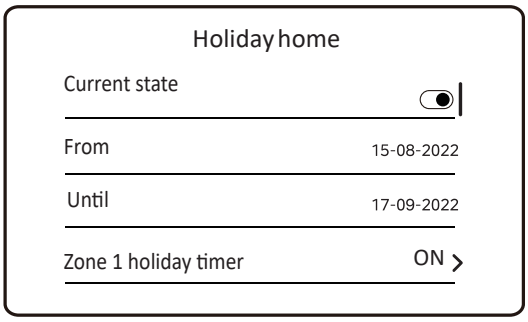

129

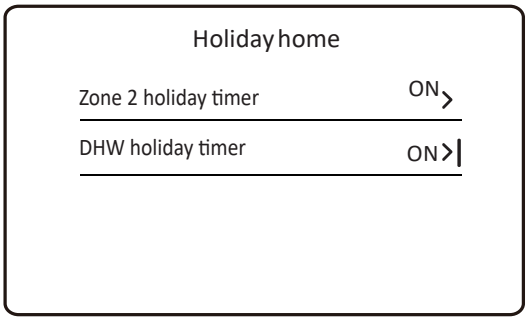

130

Current state	Indicates the status of at-home holiday mode.
From *	The day on which at-home holiday mode starts (00:00 on that day)
Until *	The day on which at-home holiday mode ends (00:00 on that day)
Zone 1 holiday timer *	Zone 1 holiday timer.
Zone 2 holiday timer *	Zone 2 holiday timer.
DHW holiday timer *	DHW holiday timer.

* Hidden if at-home holiday mode is inactive.

Fewer items than those shown above may be visible.
The number of visible items depends on the actual application.

To exit at-home holiday mode early:
when at-home holiday mode is active, press any button on the wired controller; a confirmation page to exit the mode is then displayed. Confirm the command and the appliance will return to the last mode set before at-home holiday mode.

3.4.2 Weather compensation curve settings

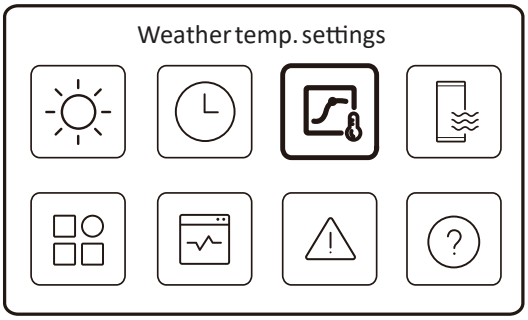

131

The set water temperature is automatically adjusted based on the outdoor ambient temperature.
This function applies to space heating and cooling only.When the function is active, the unit applies the temperature curves if the current operating mode is consistent with the activated function.

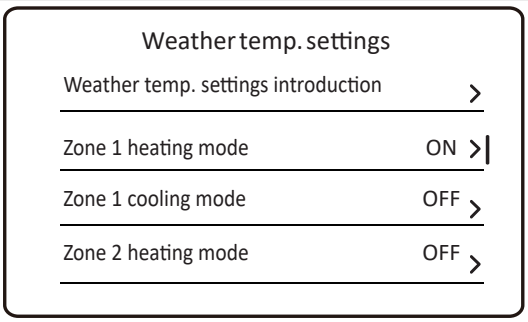

132

The status indicator on the right of the interface shows "ON" when the setting is active and "OFF" when the setting is inactive.

If the temperature is controlled by water temperature, the set temperature (on the home page) cannot be adjusted manually once this function is activated.
If the temperature is controlled by ambient temperature, the set temperature (on the home page) can be adjusted as normal.
This function is not active if the unit is in away-from-home holiday mode or at-home holiday mode, and becomes active automatically (if this function is set to active) when the unit exits away-from-home holiday mode or at-home holiday mode.

Zone 1 heating mode

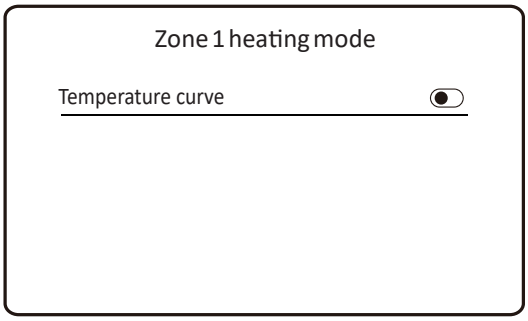

133

Press ○ to view the interface below.

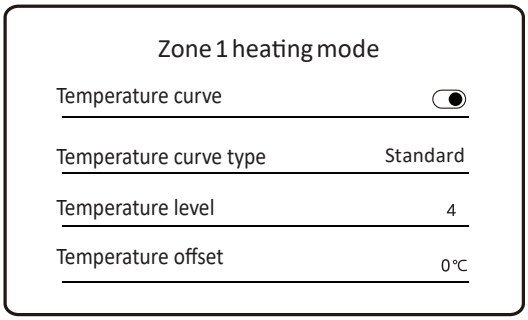

134

Temperature curve	Indicates the status of the temperature curve function.
Temperature curve type*	Select the type of curve to apply. Three types in total: Standard, ECO, Custom. **Standard**: Factory-preset curves, primarily for common conditions **ECO**: Factory-preset curves, for energy saving **Custom**: Curve parameters can be adjusted, primarily for advanced users.
Standard	
Temperature level*	Up to 8 factory-preset curves, from which one can be selected.
Temperature offset*	Fine adjustment of the curve. Slightly increase or decrease the curve temperature.
Standard	
Temperature level*	Up to 8 factory-preset curves, from which one can be selected.
ECO timer*	Indicates the status of ECO timer. - If ECO timer is inactive, the unit will always operate in ECO mode. - If ECO timer is active, the unit will operate in ECO mode only during the set time period. **Start**: the time from which the ECO curve is enabled; **End**: the time from which the ECO curve is disabled. If the set start time is later than the set end time, the unit will operate in ECO mode all day. The start time and end time cannot be set to the same value. If they are, the most recent setting is invalid and a warning window is displayed.
Custom	
Temperature setting*	Curve parameters can be adjusted.

* Hidden if the temperature curve function is inactive.

Zone 1 cooling mode

Temperature curve setting for Zone 1 cooling.
Refer to paragraph "Zone 1 heating mode" for the setting procedures.

Zone 2 heating mode

Temperature curve setting for Zone 2 heating.
Refer to paragraph "Zone 1 heating mode" for the setting procedures.

Hidden if the Double zone mode is disabled.

3.4.3 DHW settings

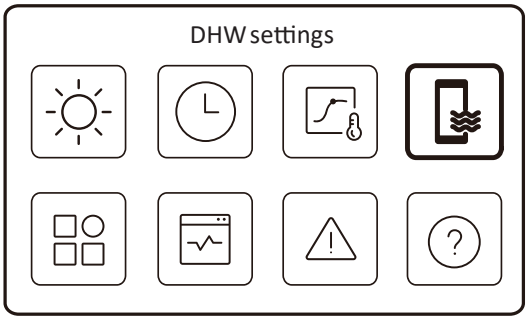

135

Hidden if the DHW mode is disabled.
The status indicator on the right of the interface shows "ON" when the setting is active and "OFF" when the setting is inactive.

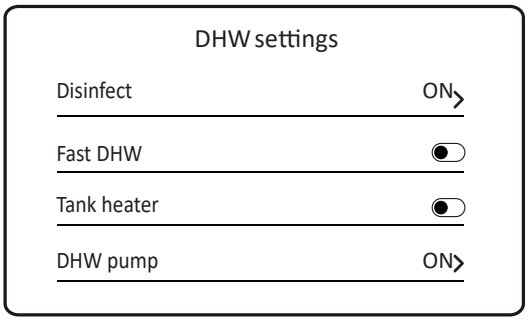

136

Disinfect		Kills legionella at high temperature.
>	Disinfect timer	Indicates the status of the disinfection function.
>	Operation day	The day of the week on which the disinfection function is active. At least one day must be selected.
>	Start	The start time of the disinfection function.
Fast DHW *		Indicates the status of the fast DHW function. - The fast DHW function forces the unit to operate in DHW mode (the unit switches immediately to DHW mode). - The fast DHW function serves to activate auxiliary heat sources such as TBH and IBH for DHW heating.
Tank heater *		Indicates the status of the tank heating function. - The Tank heater function is used to activate the TBH.
DHW pump		Daily schedule for DHW pumps. Up to 12 commands can be set. The operating time of the DHW pumps for each command is 5 minutes.

* The status indicator switches off automatically when the function ends.

Disinfection:

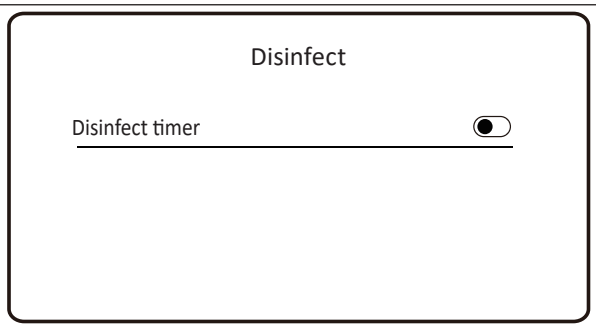

137

Press ○ to view the interface below.

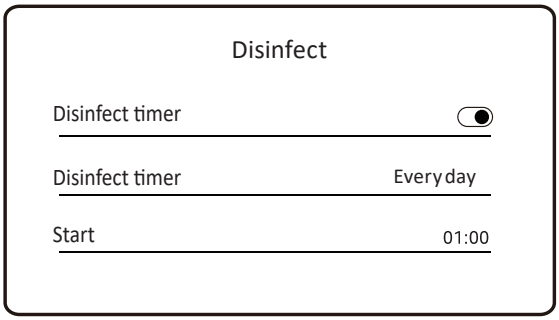

138

If the domestic hot water timer is disabled while the disinfection function is running, the disinfection function will stop without any prior warning.

DHW pump:

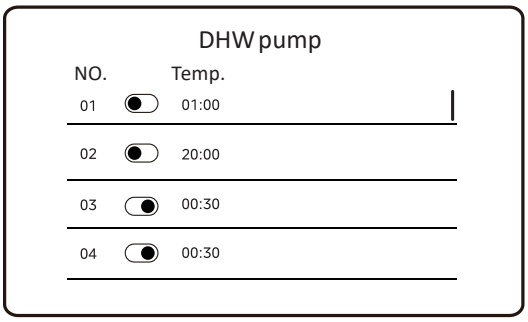

139

3.4.4 Settings

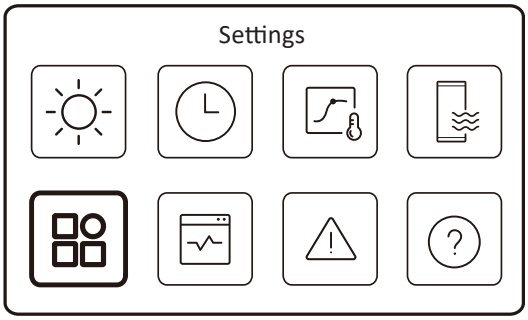

140

The status indicator on the right of the interface shows "ON" when the setting is active and "OFF" when the setting is inactive.

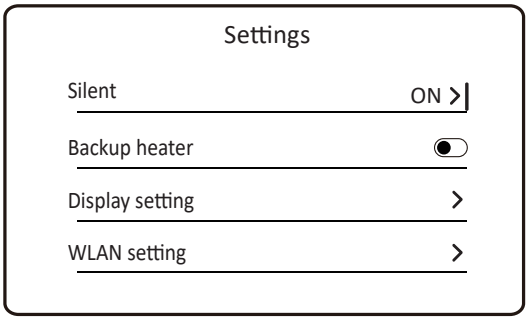

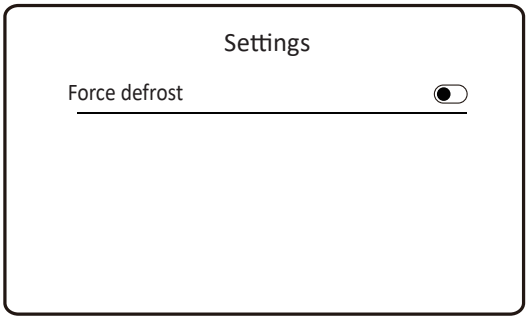

141

Silent mode

Silent mode can be selected.In silent mode, the unit operates without producing much noise.

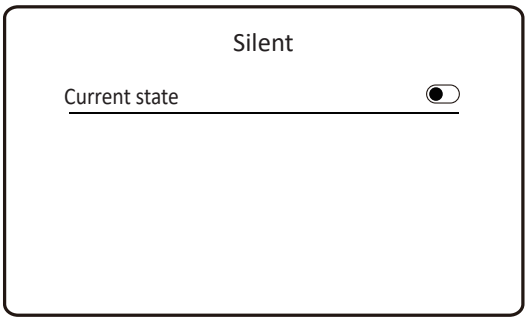

142

Press ○ to view the interface below.

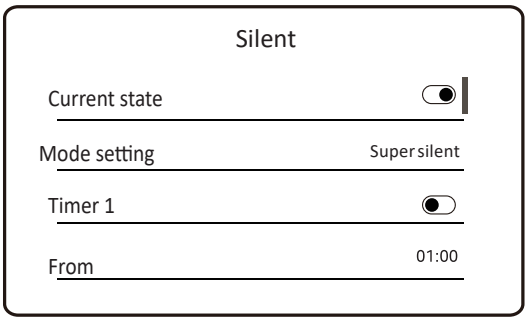

143

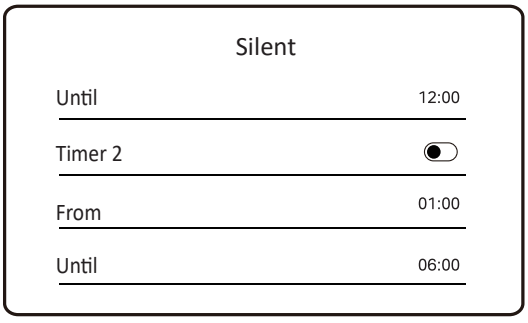

144

Current state	Indicates the status of the silent mode setting.
Mode setting	Select the level to apply: (1) Silent; (2) Super silent
Timer 1	Indicates the status of Timer 1.
From	The start time of the Timer 1 silent mode setting.
Until	The end time of the Timer 1 silent mode setting.
Timer 2	Indicates the status of Timer 2.
From	The start time of the Timer 2 silent mode setting.
Until	The end time of the Timer 2 silent mode setting.

When the current status is active and the timer is inactive, the unit operates in silent mode at all times.When the current status is active and the timer is also active, the unit operates in silent mode only during the set time period.

If the set start time is later than the set end time, the unit will operate in silent mode all day.The start time and end time cannot be set to the same value.If they are, the most recent setting is invalid and a warning window is displayed.

Backup heater

This function is hidden when the IBH function is disabled.The status indicator switches off automatically once the function is deactivated.

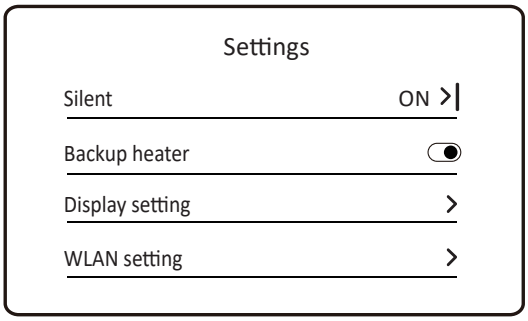

145

Display settings

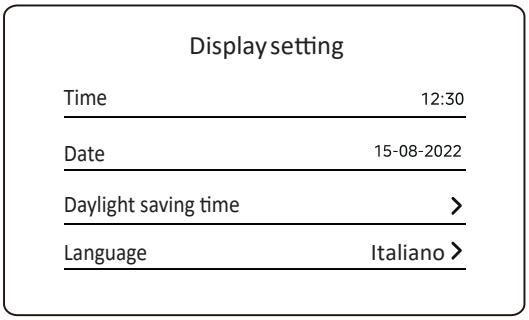

146

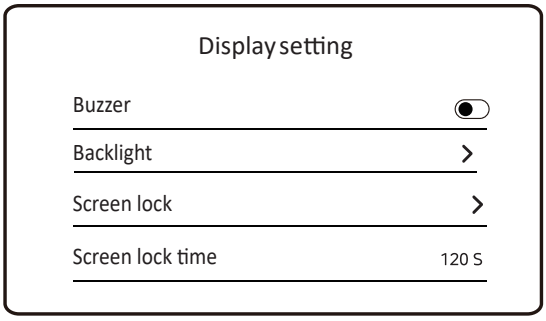

147

Time	Allows the current HMI time to be set.
Date	Allows the current HMI date to be set.
Daylight saving time	Allows the daylight saving time start and end time to be set. *
Language	Allows the HMI language to be set.
Backlight	Allows the backlight brightness to be set.
Buzzer	Indicates the status of the audible signal.
Screen lock	Provides instructions for locking and unlocking the screen.
Screen lock time	Allows the automatic screen lock timer to be set.
Decimal separator	Allows the decimal separator type to be changed.

* The timer may be skipped when the wired controller switches to daylight saving time.

WLAN settings

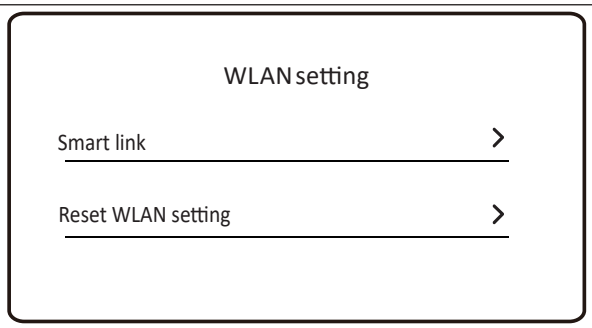

148

Smart link	Navigate to a new page containing the SN code of the wired controller. - Each time the Smart Link screen is accessed, the WLAN connection is activated for 5 minutes. - With the WLAN connection activated, connect to the unit via the app. For further information, refer to the application instructions.
Reset WLAN setting	A confirmation page is displayed. - If the reset is confirmed, the unit disconnects from the application. If you wish to use the app to operate the unit, reconnect the unit to the WLAN.

Force defrost

Current status: Indicates the status of force defrost.
The status indicator switches off automatically when force defrost ends.

3.4.5 Unit status

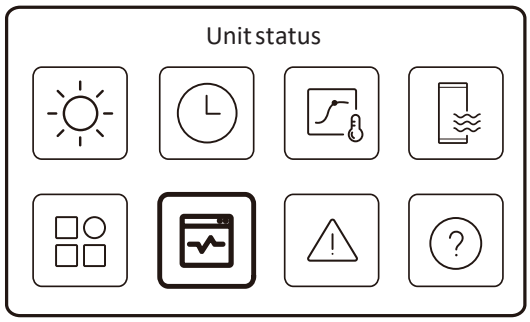

149

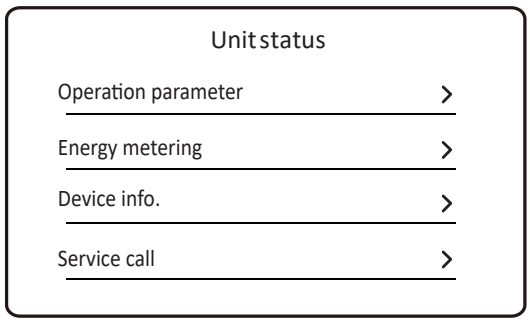

150

Operation parameter	A list of parameters relating to the units (both master unit and slave unit). The current status of each parameter can be checked. Press ‹ or › to switch between units. - For further information on each parameter, contact the installer.
Energy metering*	The energy produced, energy consumed and unit efficiency can be checked for each type. Three types in total: - Heating energy data ** - Cooling energy data ** - DHW energy data ** Two functions: - Energy data: hourly, daily, weekly, monthly, annual or total data can be checked. - Energy data log: the energy data log can be checked.
Device info.	The SN code and software version of the wired controller of the main board (IDU and ODU). Press ^ or v to change the information page (SN code and software). Both master unit and slave unit can be checked. Press ‹ or › to switch between units (master unit and slave unit).
Service call	The installer's or dealer's telephone number.

* COP/EER is calculated under normal operating conditions.
** Visible with --- displayed if the function is correspondingly disabled.

Operating parameter:

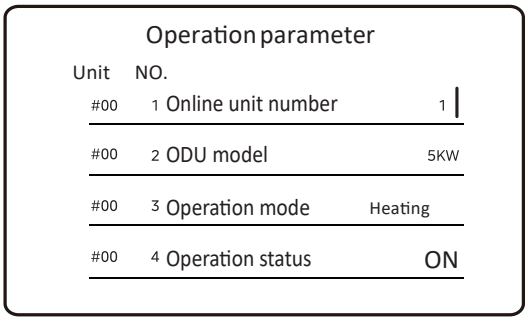

151

Energy analysis:

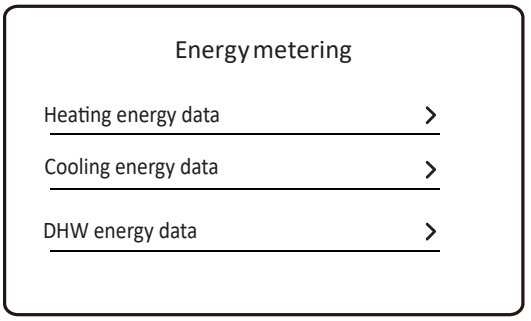

152

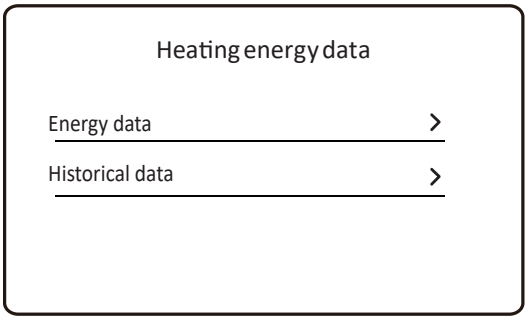

153

Energy data:

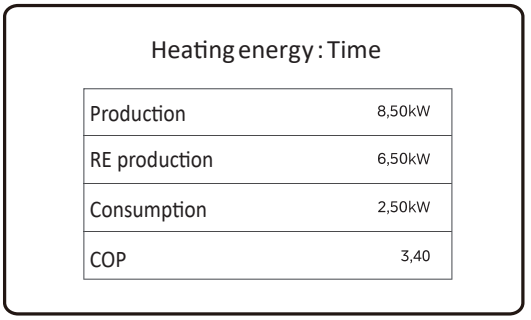

154

Annual data:

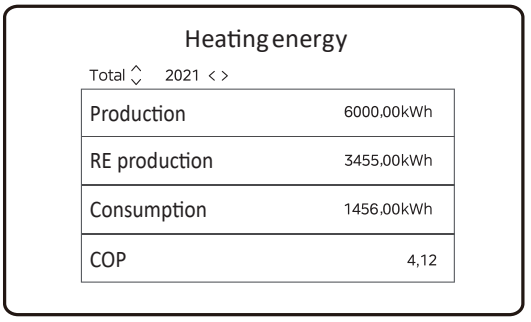

155

3.4.6 Error Information

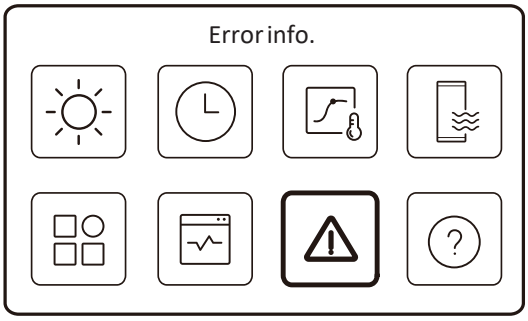

156

Access icon 7 on page C (Fig. 109). The unit's faults are then displayed (if any).

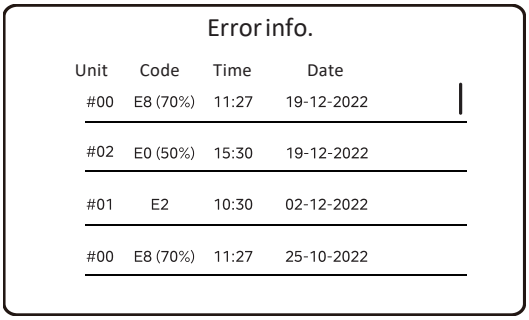

157

○ can be pressed on each record to check the definition of the fault code.

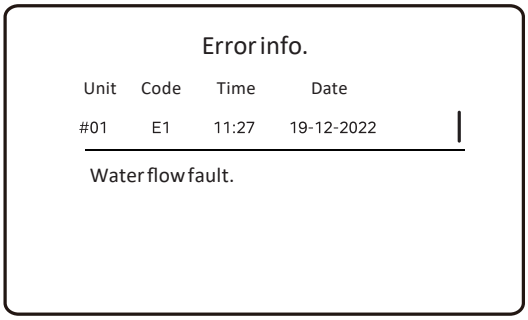

158

Clear the fault information.

Press and hold ○ for 5 seconds to clear all records in Fault info.

3.4.7 FAQ

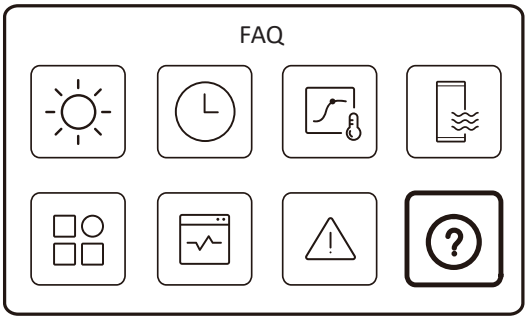

159

Access icon 8 on page C (Fig. 109). A QR code is then displayed.

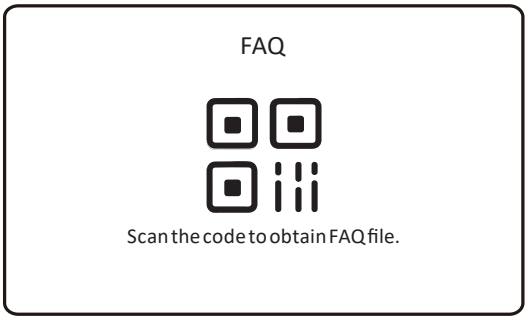

160

Scan the QR code for further details on the wired controller.

3.5 ANTI-FREEZE PROTECTION

3.5.1 Protected by software

The software is equipped with specific functions to protect the entire system against freezing, using the heat pump and the supplementary electric heater (if available).

- When the water flow temperature in the system drops to a certain value, the unit heats the water using the heat pump, the base heater and the electric heating element.
- The anti-freeze function activates only when the temperature drops to a certain value.

- In the event of a power failure, the above functions are unable to protect the unit against freezing.Therefore, always keep the unit switched on.
- If the unit's power supply must be interrupted for a long period of time, the water in the system pipework must be drained to prevent damage to the unit and pipework system due to freezing.
- In the event of a power failure, add glycol to the water.The presence of glycol lowers the freezing point of the water.

3.5.2 Glycol protection

The presence of glycol lowers the freezing point of the water.

Propylene glycol is a toxic substance; it must only be handled by suitably trained and qualified personnel.

Glycol can corrode the system.When uninhibited glycol comes into contact with oxygen, it becomes acidic.This corrosion process is accelerated by copper and high temperatures.Uninhibited acidic glycol attacks metal surfaces, forming galvanic corrosion cells that cause serious damage to the system.It is therefore important to follow these steps:

- allow a qualified specialist to treat the water correctly;
- select a glycol with corrosion inhibitors to counteract the acids that form through glycol oxidation;
- do not use automotive glycol as its corrosion inhibitors have a limited service life and contain silicates that may contaminate or block the system;
- do not use galvanised pipes in glycol systems, as such pipes may cause precipitation of certain components of the glycol corrosion inhibitor.

Glycol absorbs moisture from the environment; it is therefore important to avoid using glycol that has been exposed to air.If glycol is left uncovered, the water content increases, lowering the glycol concentration and potentially causing freezing of hydraulic components.To prevent this, take appropriate precautions and minimise glycol exposure to air.

Types of glycol

The heat pump's hydraulic circuit is always protected against frost, even with a power failure, by always using an antifreeze liquid.
In the presence of antifreeze liquid, the unit is protected down to a minimum temperature of -20°C.
Protect the central heating circuit from freezing by inserting a good-quality antifreeze liquid, which is specially suited for central heating systems and which is manufacturer guaranteed not to cause damage to the heat exchanger or other components of the units.
The freezing protection solutions must be based on propylene glycol with toxicity degree class 1, as indicated in the volume "Clinical Toxicology of Commercial Products", 5thi edition.
The materials used for the central heating circuit of Immergas units resist ethylene and glycol based antifreeze liquids (if the mixtures are prepared perfectly). Adding glycol lowers the freezing point of water.
The required concentration depends on the lowest expected outdoor temperature. Add glycol according to the indications of the table below.
An aqueous solution must be made with potential pollution class of water 2 (EN 1717:2002).
For life and possible disposal, follow the supplier's instructions.

Required glycol concentration

The required glycol concentration depends on the lowest expected outdoor temperature and whether the system is to be protected against bursting or freezing.To prevent the system from freezing, more glycol is required.
To access the unit for installation and maintenance, follow the instructions below.

Lowest expected external temperature	Prevention from risk of bursting (1)	Prevention from risk of freezing (2)
-5°C	10%	15%
-10°C	15%	25%
-15°C	20%	35%
-20°C	25%	N/D*
-25°C	30%	N/D*
-30°C	35%	N/D*

* Additional measures are required to prevent freezing.
(1): Glycol can prevent pipework from bursting, but cannot prevent the liquid inside from freezing.
(2): Glycol can prevent the liquid inside the pipework from freezing.

- The concentration of glycol added must NEVER exceed 35%.
- If the liquid in the system is frozen, the pump will NOT be able to start;Note that protection against system bursting alone may not prevent the liquid inside from freezing.
- If water stagnates inside the system, it is very likely to freeze and cause damage to the system.

Glycol and maximum permitted water volume.

The addition of glycol to the hydraulic circuit reduces the maximum permitted water volume of the system.

3.5.3 Protection with antifreeze function and antifreeze valves

This function protects the unit down to a minimum temperature of -25°C if powered correctly.
In the event of a power failure, these functions are not capable of guaranteeing protection. It is therefore necessary to install antifreeze protection valves with air sensor (not supplied by Immergas) which drain the water from the unit before it can freeze.

With rigid outside temperatures, the antifreeze protection functions could trigger the generator frequently, thus contributing to raise consumption.

With rigid outside temperatures, the antifreeze protection functions could trigger the generator frequently, thus contributing to raise consumption.

- The units Magis M V2 and the control panel are correctly connected to the power supply circuit and constantly supplied and connected to each other.
- The essential components of the antifreeze unit and/or kit are not faulty.

3.5.4 Measure without freeze protection

In cold environments, if there is no antifreeze (e.g. glycol) in the system, or if a prolonged power failure or pump failure is anticipated, drain the system (as shown in the figure below).

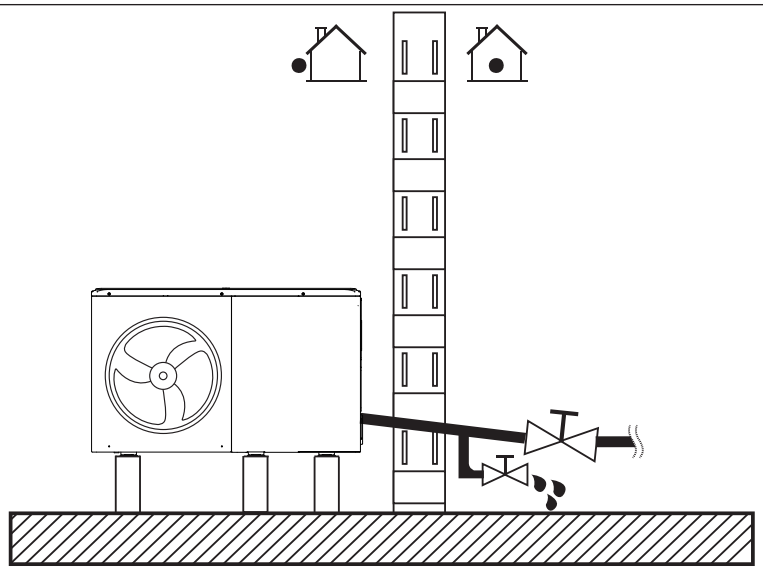

161

If water is not removed from the system in freezing conditions when the unit is not in use, frozen water may damage the water circuit components.

3.5.5 Anti-freeze protection for the water circuit

All internal hydronic components are insulated to reduce heat loss.External pipework must also be insulated.In the event of a power failure, the above features would not protect the unit against freezing.

3.5.6 Safety valve, water pump failure

If abnormal leaks occur during operation of the safety valve, this may be caused by the valve core spring or sealing device becoming stuck, preventing effective sealing, or by damage to the valve body.In such cases, the valve body must be flushed or replaced with a new one.

Leaks caused by the hydraulic system reaching or exceeding the pressure set on the safety valve are normal.In such cases, effectively reduce the hydraulic system pressure to stop the leak.(The discharge pressure value is indicated on the valve body or in the instruction manual.)

Long-term storage (exceeding 6 months) may require a mechanical inspection of the water pump.Manually rotate the water pump rotor shaft;MUST rotate smoothly.For detailed inspection procedures, refer to the Maintenance technician chapter.

3.6 SUPPORT

3.6.1 Configuration

To initialise the unit, the installer must enter a set of advanced settings.The advanced settings are accessible in For serviceman mode. The complete list of advanced settings parameters is available in paragraph 3.9 "Operation parameters".

How to access the "For serviceman" mode.

Press and hold ☰ and › simultaneously for 3 seconds to access the authorisation page.Enter password 234 and confirm.The system then switches to the page with a list of advanced settings.



162

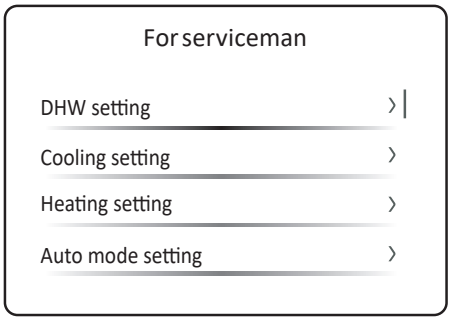

163

"For serviceman" is for installers or other specialists with sufficient knowledge and skills only.Should the end user access the "For serviceman" mode, this is considered improper use.

Saving settings and exiting the For serviceman mode.

After adjusting all the settings, press ☰, and the confirmation page appears.Select "YES" and the confirm to exit the "For serviceman" mode.

Settings are saved automatically upon exiting the mode For serviceman.
The temperature values displayed on the wired controller are measured in °C.

3.6.1.1 DHW setting

Select the target item and access the settings page.
Adjust the settings and setpoint values according to the end user's requirements.

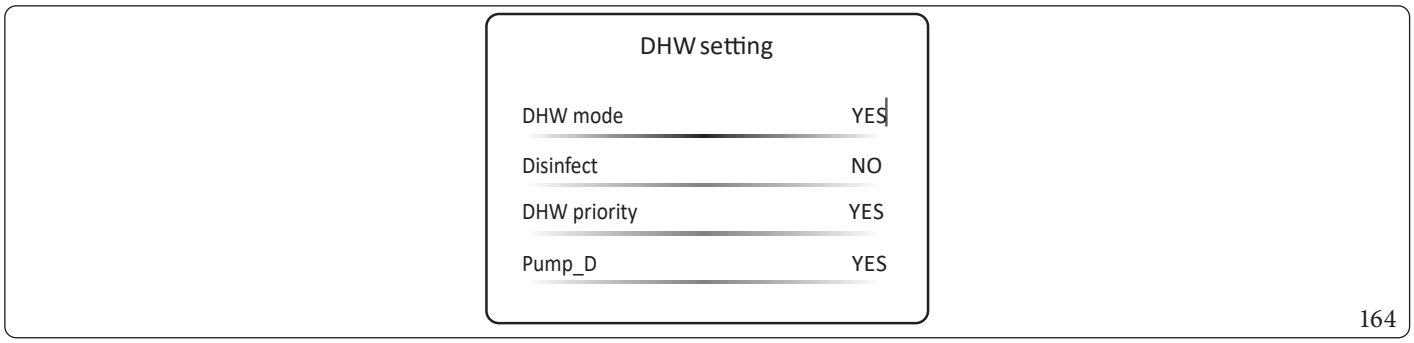

164

All the parameters and limitations set are reported in paragraph 3.9.1 "DHW setting".

3.6.1.2 Cooling setting

Select the target item and access the settings page.
Adjust the settings and setpoint values according to the end user's requirements.

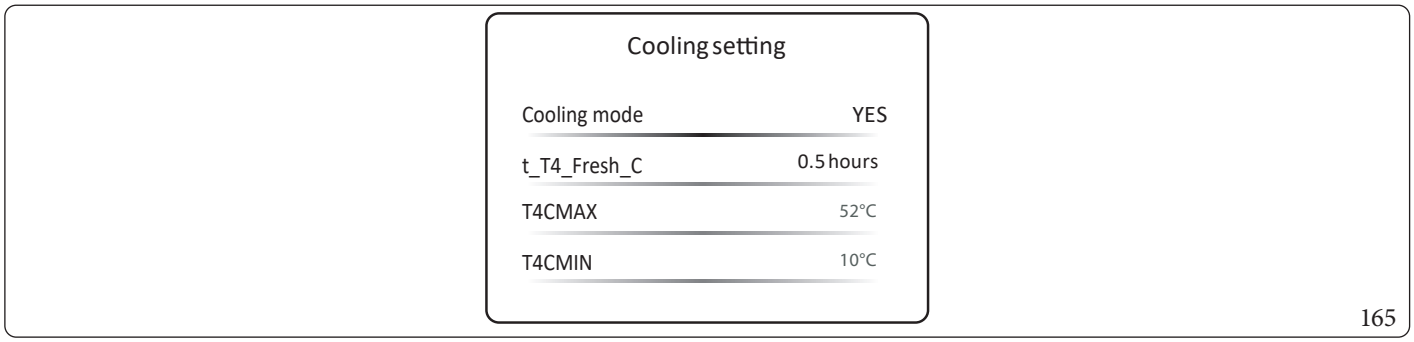

165

All the parameters and limitations set are reported in paragraph 3.9.2 "Cooling setting".

3.6.1.3 Heating setting

Select the target item and access the settings page.
Adjust the settings and setpoint values according to the end user's requirements.

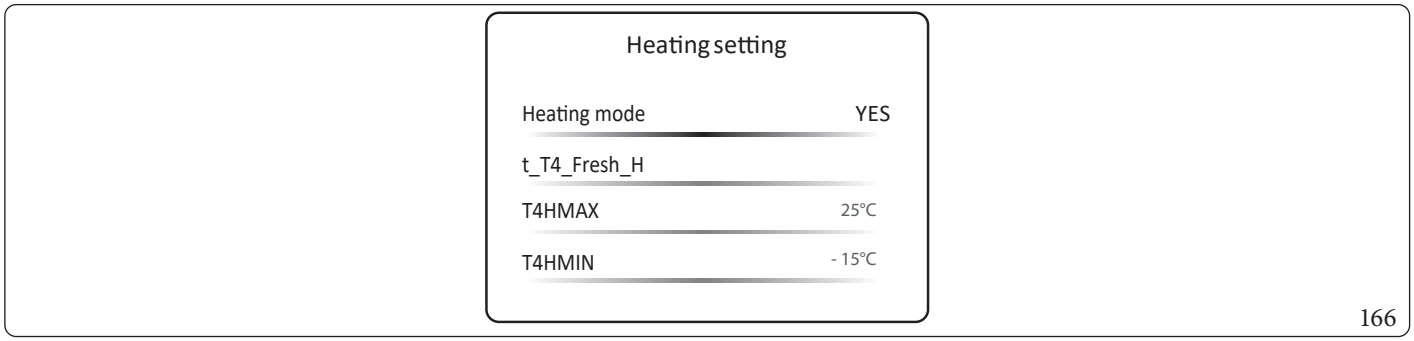

166

All the parameters and limitations set are reported in paragraph 3.9.3 "Heating setting".
Both cooling mode and heating mode must be enabled and cannot both be set to NO simultaneously.

3.6.1.4 Auto mode setting

Select the target item and access the settings page.
Adjust the settings and setpoint values according to the end user's requirements.

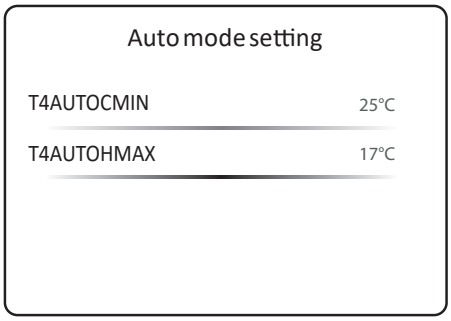

167

All the parameters and limitations set are reported in paragraph 3.9.4 "AUTO mode setting".

3.6.1.5 Temperature type setting

Select the target item and access the settings page.
Adjust the settings and setpoint values according to the end user's requirements.

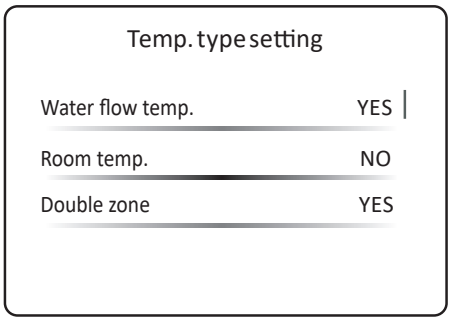

168

All the parameters and limitations set are reported in paragraph 3.9.5 "Temperature type setting".
When both Double zone and Room temp.modes are enabled, room temperature control is only valid for Zone 2, while Zone 1 is always controlled by water temperature.
When the ambient temperature function is enabled, the temperature curve for the ambient temperature control zone is applied and the set temperature of the ambient temperature control zone can still be adjusted.The temperature curve type and temperature compensation can be set. (The unit stops operating when the set temperature or the temperature curve is reached.)

3.6.1.6 Room thermostat setting

Select the target item and access the settings page.
Adjust the settings and setpoint values according to the end user's requirements.

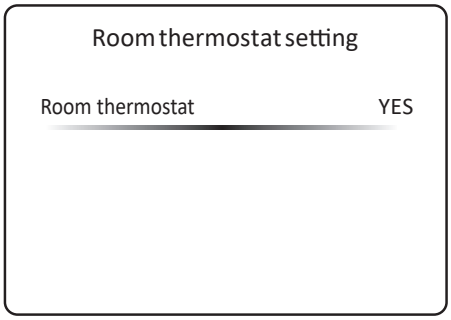

169

All the parameters and limitations set are reported in paragraph 3.9.6 "Room thermostat setting".

- If the room thermostat is set to any value other than "no", the temperature type setting is not valid.
- When the room thermostat is set to Dual Zone, the mode is activated automatically and the temperature control mode is the water temperature mode.
- When the room thermostat is set to **Mode Setting/Single Zone**, Dual Zone mode is deactivated automatically and the temperature control mode is the water temperature mode.
- When the room thermostat is set to "no", the room thermostat is not valid.
- The wired controller cannot be used to turn the unit on/off or set the operating mode.Except for the DHW timer, all timers in the Schedule section are not valid.The unit can read the operating status of the unit and set the temperature if the temperature curve is inactive.
- When the room thermostat is set to Single Zone, the wired controller cannot be used to turn Zone 1 on/off.Except for the DHW timer, all timers in the Schedule section are not valid.The unit can read the operating status of the unit and set the operating mode (excluding Auto mode) and the temperature if the temperature curve is inactive.
- When the room thermostat is set to Dual Zone, the wired controller cannot be used to turn Zone 1 or Zone 2 on/off.Except for the DHW timer, all timers in the Schedule section are not valid.The unit can read the operating status of the unit and set the operating mode (excluding Auto mode) and the temperature if the temperature curve is inactive.

When the room thermostat is set to a value other than "no", the timers in the "Schedule" section are **not available**.

3.6.1.7 Additional heat source

Select the target item and access the settings page.
Adjust the settings and setpoint values according to the end user's requirements.

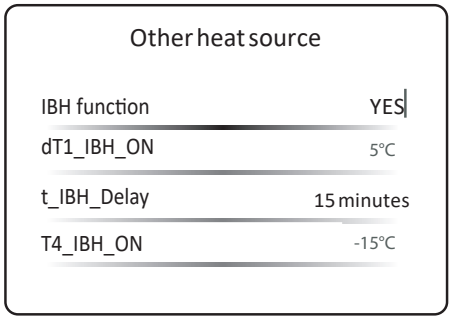

170

All the parameters and limitations set are reported in paragraph 3.9.7 "Additional heat source".

3.6.1.8 After-sales service

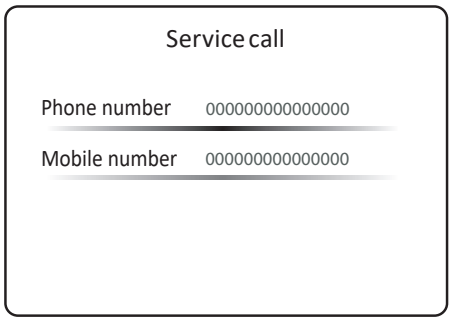

171

Up to two phone numbers can be saved, each with a maximum length of 15 characters.If the length is less than 15 characters, use 0 at the front to indicate empty characters.

3.6.1.9 Reset to factory settings

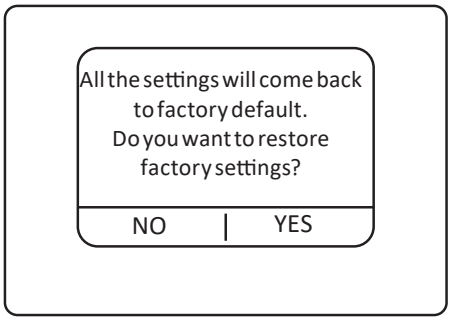

172

Allows all operating parameters to be reset to factory preset values.
Select YES and confirm to validate this function.

3.6.1.10 Test run

Refer to paragraph 3.6..3 "Implementing".

3.6.1.11 Special function

Select the target item and access the settings page.
Adjust the settings and setpoint values according to the end user's requirements.

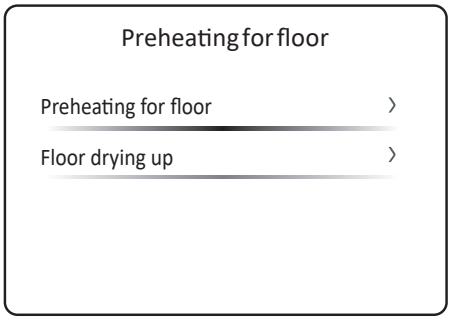

173

All the parameters and limitations set are reported in paragraph 3.9.8 "Floor pre-heating".

Floor pre-heat.

To reduce the risk of damage to the floor and piping system, gently heat the floor water pipes during the initial heating operation.

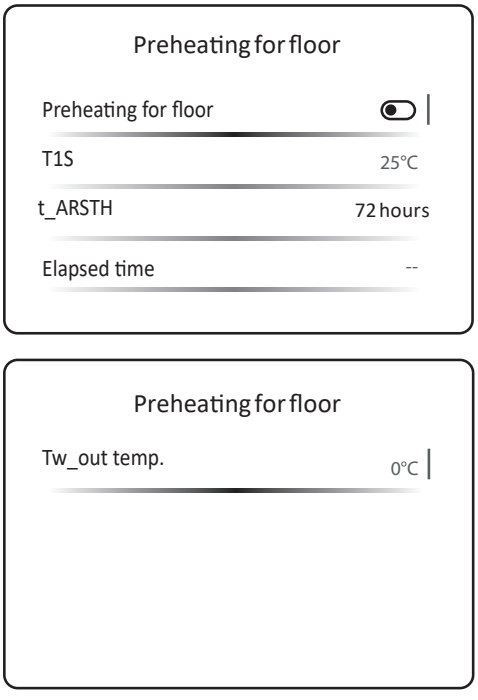

174

The first row shows the operating status.Grey means off, green means on.
T1S is the set temperature."t_ARSTH" is the duration.The elapsed time is the time for which the function has been enabled."Tw_out temp." is the current outlet water temperature.

Floor drying

Supply gentle heat to concrete or other structural materials surrounding the floor water pipes over a certain period of time, thereby accelerating the drying-out process.

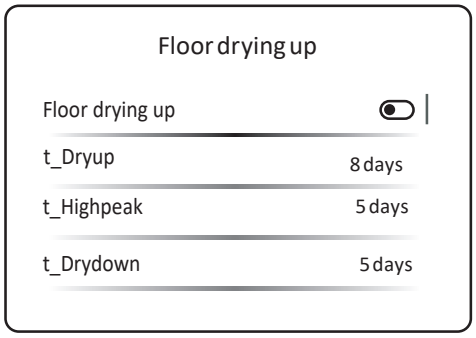

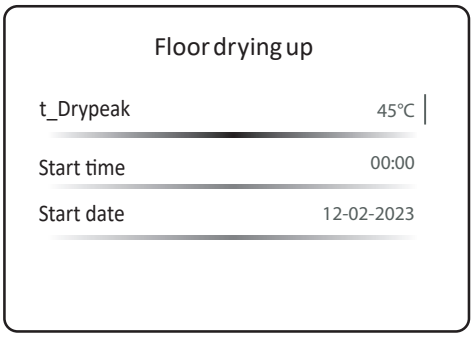

175

The first row shows the status indicator:Grey means off, green means on.
"t_Dryup" is the time during which the unit increases the temperature.
"t_Highpeak" is the time during which the unit maintains the temperature.
"t_Drydown" is the time during which the unit decreases the temperature.
t_Drypeak is the target temperature.
This function is activated only when the time reaches the set start time and day.When the function is activated, the interface is as shown below:

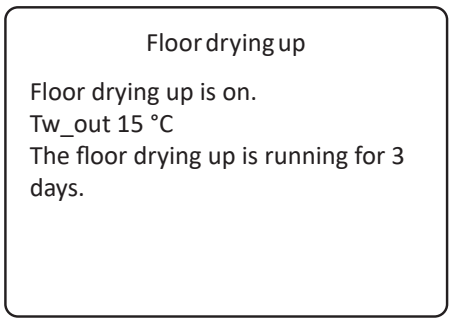

176

3.6.1.12 Automatic restart

Select the target item and access the settings page.
Adjust the settings and setpoint values according to the end user's requirements.

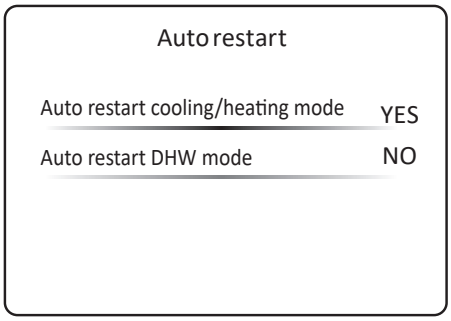

177

All the parameters and limitations set are reported in paragraph 3.9.9 "Automatic restart".

3.6.1.13 Power input limitation

Select the target item and access the settings page.
Adjust the settings and setpoint values according to the end user's requirements.

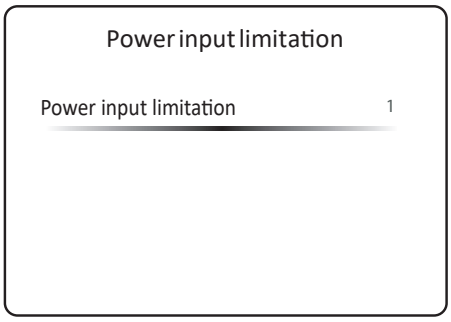

178

All the parameters and limitations set are reported in paragraph 3.9.10 "Consumption limitation".
This function makes the unit suitable for a variety of power supplies:8 configurations are available to choose from based on the maximum permitted input current.
If you wish to set the unit to a higher input current, select configuration 1.
If you wish to set the unit to a lower input current, select a configuration from 2 to 8, resulting in a reduction of input power and capacity.

Power limitation function

Configuration	MAGIS M6 V2	MAGIS M8 V2	MAGIS M10 V2	MAGIS M12 V2	MAGIS M16 V2	MAGIS M12 T V2	MAGIS M16 T V2
1	13,5 A	17,5 A	17,5 A	28 A	28 A	9,5 A	9,5 A
2	12 A	16 A	16 A	26 A	26 A	8,5 A	8,5 A
3	11 A	15 A	15 A	24 A	24 A	7,5 A	7,5 A
4	10 A	14 A	14 A	22 A	22 A	7 A	7 A
5	9 A	13 A	13 A	20 A	20 A	6,5 A	6,5 A
6	8 A	12 A	12 A	18 A	18 A	6 A	6 A
7	8 A	12 A	12 A	18 A	18 A	6 A	6 A
8	8 A	12 A	12 A	18 A	18 A	6 A	6 A

3.6.1.14 Input definition

Select the target item and access the settings page.
Adjust the settings and setpoint values according to the end user's requirements.

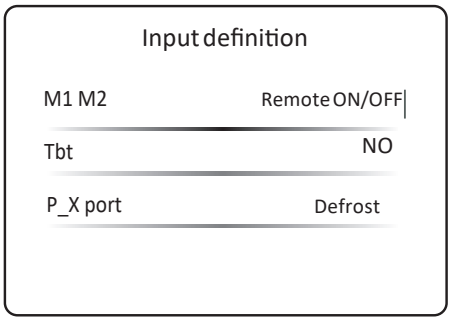

179

All the parameters and limitations set are reported in paragraph 3.9.11 "Input definition".

3.6.1.15 Cascade setting

Select the target item and access the settings page.
Adjust the settings and setpoint values according to the end user's requirements.

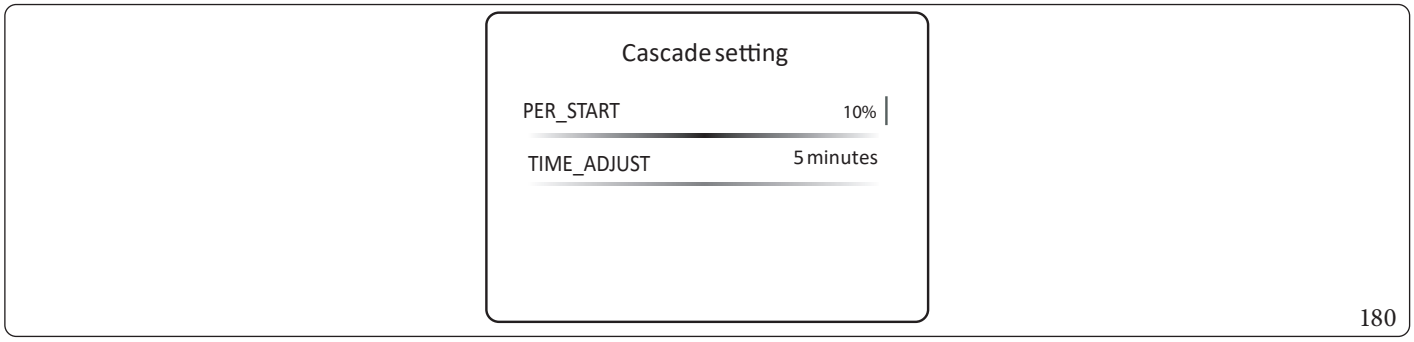

180

All the parameters and limitations set are reported in paragraph 3.9.12 "Cascade setting".

3.6.1.16 HMI address setting

Select the target item and access the settings page.
Adjust the settings and setpoint values according to the end user's requirements.

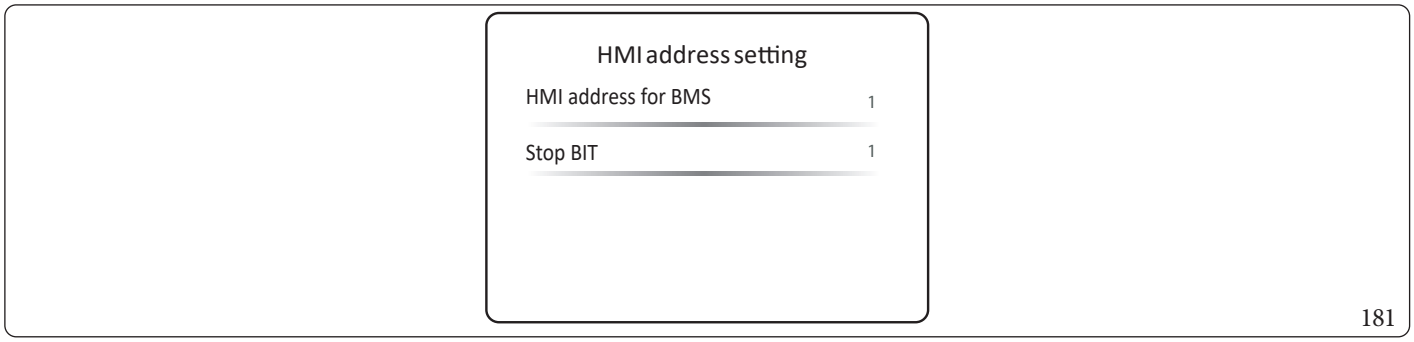

181

All the parameters and limitations set are reported in paragraph 3.9.13 "HMI address setting".

3.6.1.17 Common setting

Select the target item and access the settings page.
Adjust the settings and setpoint values according to the end user's requirements.

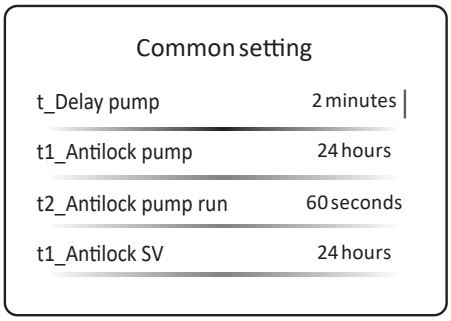

182

All the parameters and limitations set are reported in paragraph 3.9.14 "Common setting".

3.6.2 Additional operating reference

3.6.2.1 Mode

Set the unit operating mode for ambient comfort.

- Three modes in total: Heating, Cooling and Auto modes.

Auto	The unit will automatically select the operating mode based on the outdoor temperature and certain settings under For serviceman. This icon is not visible if the heating or cooling function is disabled.
Heating	The heating icon is not visible if the heating function is disabled.
Cooling	The cooling icon is not visible if the cooling function is disabled.

3.6.2.2 Schedule

Set up the unit operating schedules.

- This function is based on the current time displayed on the HMI (ensure that the time is correct).

Operation conflicts and priorities

1. A daily schedule and a weekly schedule can operate simultaneously.
2. For all schedules, the timers (if more than one) for the same zone or appliance must differ, and the operating mode of Zone 1 and Zone 2 within the same time setting must be the same. If they are, the most recent setting is invalid and a warning window is displayed.
3. When the unit is in Away-from-home holiday or Away-from-home holiday mode, the daily timer, weekly timer, and weather curve function are no longer valid and will not be restored until the unit exits Away-from-home holiday or At-home holiday mode.
4. If Away-from-home holiday and At-home holiday modes are active simultaneously, the dates for both modes cannot overlap. If they are, the most recent setting is invalid and a warning window is displayed.

Other

1. All daily and weekly schedules become inactive, the set time reverts to 0:00, and the set temperature reverts to 24 °C if the temperature control mode is changed.
2. The unit performs disinfection based on the settings in 11.2.4 DHW Setting, if the disinfection function in Away-from-home holiday mode is inactive.
3. In the event of a power failure during Away-from-home holiday or At-home holiday mode, the unit will operate in Away-from-home holiday or At-home holiday mode after power is restored, provided the current date still falls within the scheduled Away-from-home holiday or At-home holiday mode period.
4. If the mode setting is OFF, the set temperature reverts to 0 °C.

3.6.2.3 Weather compensation curve setting

Allow the set water temperature to be adjusted according to the outdoor ambient temperature.

- This function applies to space heating and cooling only.When the function is active, the unit applies the temperature curve if the current operating mode matches the mode for which the function has been activated.
- Three curve types in total: Standard, ECO, Custom.

Temperature curve representation

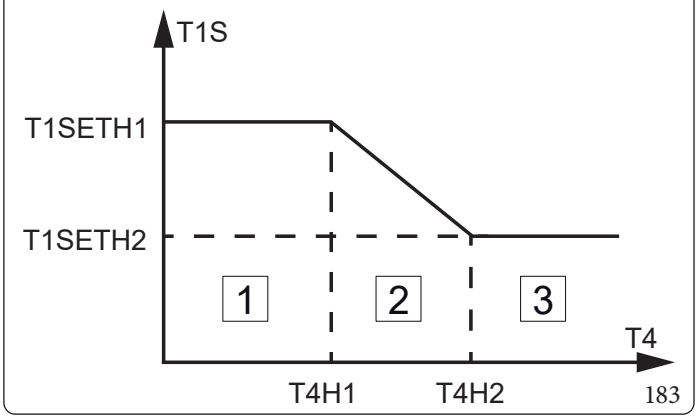

Key (Fig. 183):

1 - Area 1
2 - Area 2
3 - Area 3
T1S - Water temperature setting
T4 - External room temperature

In Area 1 and Area 3, the set water temperature remains stable despite variations in outdoor ambient temperature.In Area 2, the set water temperature is adjusted according to the outdoor ambient temperature.

Standard

The manufacturer has preset up to 8 curves; the parameter values are as indicated below.
For heating:

	T4 < 0	**0 ≤ T4 < 20**	**T4 ≥ 20**
1-T1S	0.175 * (0-T4) + 25	0.25 * (20-T4) + 20	20
2-T1S	0.35 * (0-T4) + 30	0.5 * (20-T4) + 20	20
3-T1S	0.525 * (0-T4) + 35	0.75 * (20-T4) + 20	20
4-T1S	0.63 * (0-T4) + 38	0.9 * (20-T4) + 20	20
5-T1S	0.875 * (0-T4) + 45	1.25 * (20-T4) + 20	20
6-T1S	0.98 * (0-T4) + 48	1.4 * (20-T4) + 20	20
7-T1S	1.225 * (0-T4) + 55	1.75 * (20-T4) + 20	20
8-T1S	1.4 * (0-T4) + 60	2 * (20-T4) + 20	20

All 8 curves illustration:

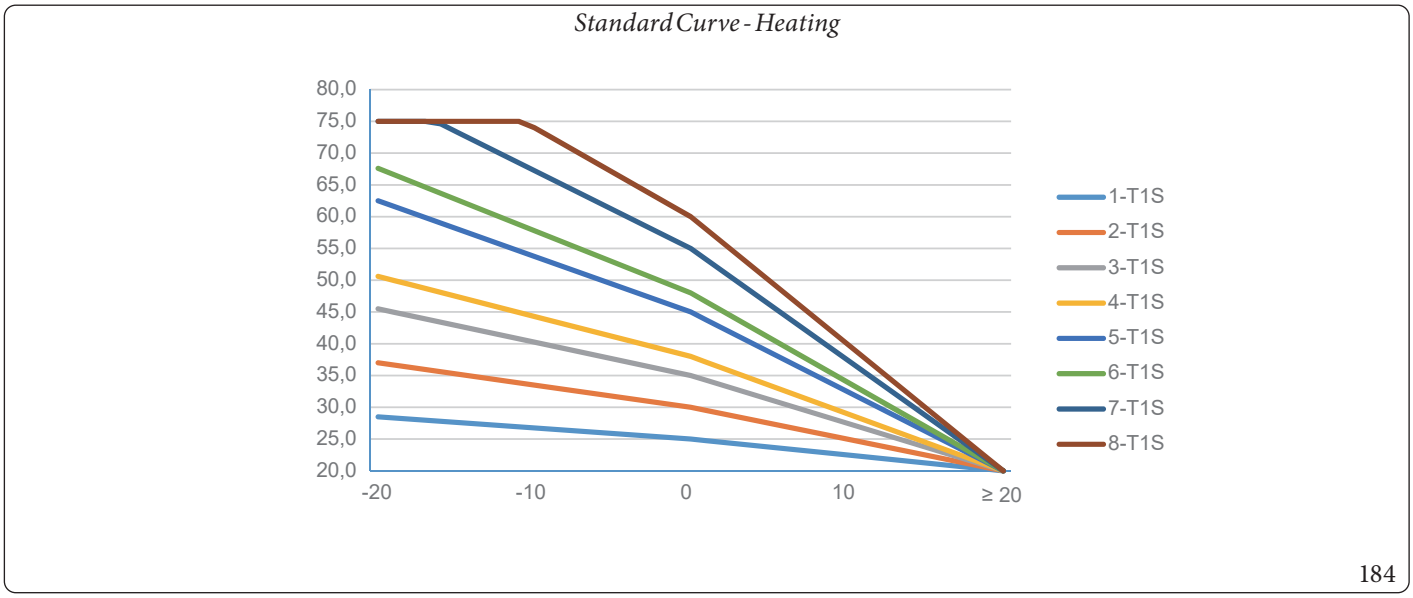

184

For cooling (FCU - fan coil unit application):

T4	-10≤T4<15	15≤T4<22	22≤T4<30	30≤T4
1-T1S	16	11	8	5
2-T1S	17	12	9	6
3-T1S	18	13	10	7
4-T1S	19	14	11	8
5-T1S	20	15	12	9
6-T1S	21	16	13	10
7-T1S	22	17	14	11
8-T1S	23	18	15	12

All 8 curves illustration:

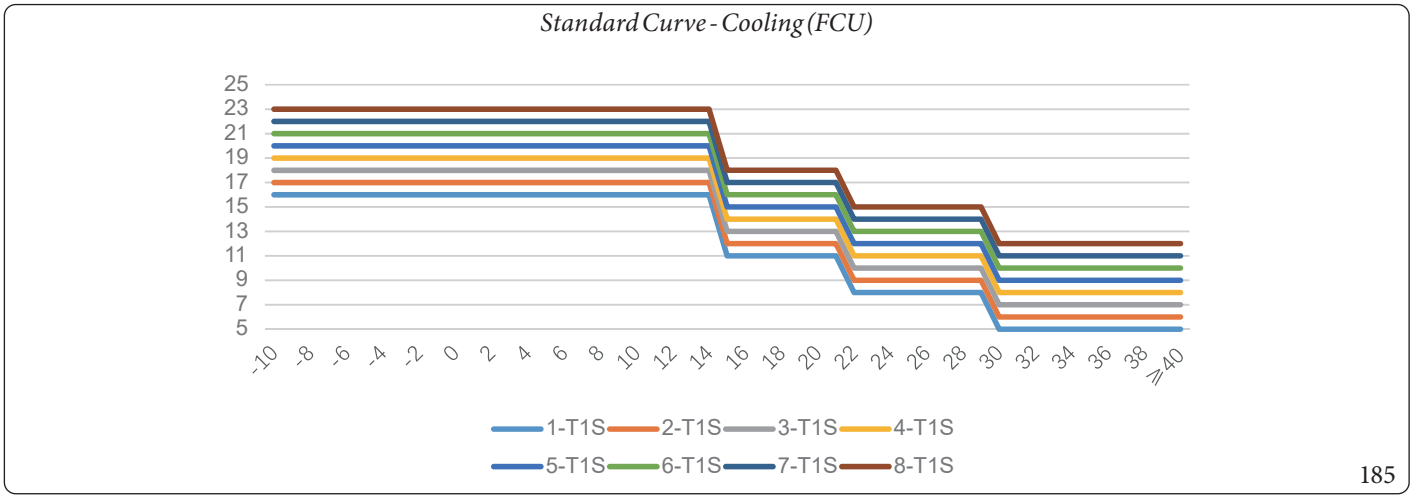

185

For cooling (RAD - radiator application, FLH - floor heating application):

T4	-10≤T4<15	15≤T4<22	22≤T4<30	30≤T4
1-T1S	20	18	18	18
2-T1S	21	19	18	18
3-T1S	22	20	19	18
4-T1S	23	21	19	18
5-T1S	24	21	20	18
6-T1S	24	22	20	19
7-T1S	25	22	21	19
8-T1S	25	23	21	20

All 8 curves illustration:

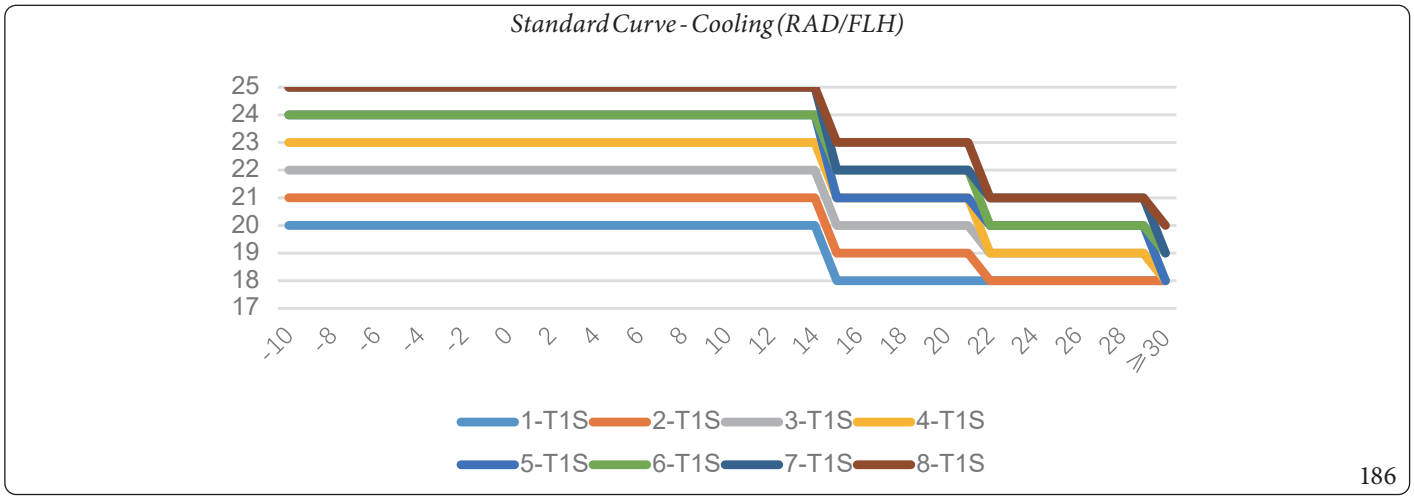

186

Temperature offset information
Increases or decreases the overall set water temperature of the temperature curve.The temperature curve shifts up or down in the illustration.

ECO

ECO is only available for Zone 1 heating mode.

T4	-≤-20	-19	-18	-17	-16	-15	-14	-13	-12	-11	-10	-9	-8	-7	-6	-5	-4	-3	-2	-1	0
1-T1S	29	29	29	29	28	28	28	28	28	28	28	28	27	27	27	27	27	27	25	25	25
2-T1S	32	32	32	32	31	31	31	31	31	31	31	31	30	30	30	30	30	30	30	30	30
3-T1S	38	38	38	38	38	38	38	38	38	38	38	38	36	36	36	36	36	35	35	35	35
4-T1S	40	40	40	40	39	39	39	39	39	39	39	39	38	38	38	38	38	38	38	38	37
5-T1S	45	45	45	45	44	44	44	44	44	44	44	44	43	43	43	43	43	43	43	43	42
6-T1S	48	48	48	48	47	47	47	47	47	47	47	47	46	46	46	46	46	46	46	46	45
7-T1S	52	52	52	52	51	51	51	51	51	51	51	51	50	50	50	50	50	50	50	50	49
8-T1S	55	55	55	55	54	54	54	54	54	54	54	54	53	53	53	53	53	53	53	53	52

T4	1	2	3	4	5	6	7	8	9	10	11	12	13	14	15	16	17	18	19	≥20
1-T1S	24	24	24	24	23	23	23	23	22	22	22	22	21	21	21	21	20	20	20	20
2-T1S	29	29	28	28	27	27	26	26	25	25	24	24	23	23	22	22	21	21	20	20
3-T1S	34	33	32	32	31	30	29	29	28	27	26	26	25	24	23	23	22	21	20	20
4-T1S	37	36	35	34	33	32	31	30	29	29	28	27	26	25	24	23	22	21	20	20
5-T1S	42	42	41	40	38	37	36	35	33	32	31	30	28	27	26	25	23	22	21	20
6-T1S	45	45	43	42	41	39	38	36	35	34	32	31	29	28	27	25	24	22	21	20
7-T1S	49	49	49	48	46	44	42	41	39	37	35	34	32	30	28	27	25	23	21	20
8-T1S	52	52	52	52	50	48	46	44	42	40	38	36	34	32	30	28	26	24	22	20

All 8 curves illustration:

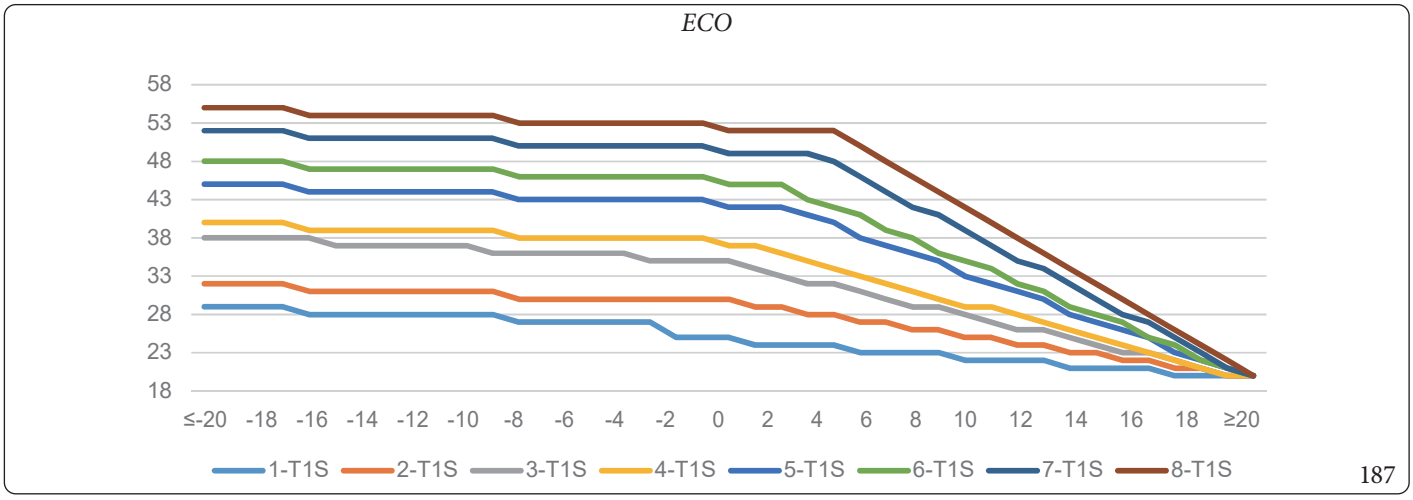

"ECO timer" can be seen at the bottom of the page.The timer start and end times can be set, and the timer can be activated.If the timer is active, the unit will run the ECO curve only during the set timer period.If the timer is inactive, the unit will run the ECO curve continuously.

Custom

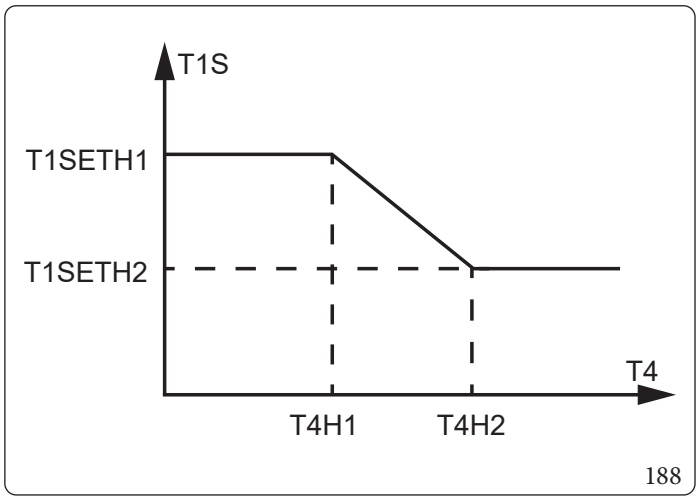

Key (Fig. 188):
T1S - Water temperature setting
T4 - External room temperature

It will be possible to adjust T1SETH1, T1SETH2, T4H1, and T4H2.

Temperature offset information
Increases or decreases the overall set water temperature of the temperature curve.The temperature curve shifts up or down in the illustration.

3.6.2.4 DHW settings

The function is invisible if DHW mode is disabled.

Additional DHW circuit settings.

Disinfect

- When the unit is operating in disinfection mode with DHW active, if DHW is disabled on the home page, the unit will ask whether you wish to deactivate disinfection.If deactivation is confirmed, a warning window appears.

If any DHW circuit timer switches to OFF during the disinfection procedure, disinfection is automatically deactivated without prior notice.

- If the unit is in disinfection mode with DHW disabled and DHW is activated on the home page, disinfection continues without any warnings.

Tank heating

The DHW tank electric heater and the space heating electric heater cannot operate simultaneously.The most recent setting is valid, while the previous one is no longer valid.

3.6.2.5 Options

Silent mode

The start time and end time of the Silent mode timer cannot be identical. If two Silent mode timers are activated simultaneously, the dates of both timers cannot overlap. If they are, the most recent setting is invalid and a warning window is displayed.

Backup heater

Not visible if IBH is disabled.

WLAN settings

If the Wi-Fi name is changed, the unit will lose the WLAN connection and will need to be reconnected.

Force defrost

Not visible if the unit is operating in cooling mode.

3.6.2.6 Unit status

Further information on the unit and its operating status.

Operation parameters

The operating time is rounded down. For example, if the unit of measurement is hours and the actual operating time is 0.5 h, the displayed value is 0.

Energy analysis

For accumulated data (day, week, month, year),

1. the start time is the beginning of that day, week, month, or year.
2. If the HMI time is reset and data recording has been carried out from the beginning of the relevant day, week, month, or year, the calculation will start from the beginning of that day, week, month, or year.
3. If the HMI time is reset and there is no data recording from the beginning of the relevant day, week, month, or year, the calculation will start from the time at which the reset occurred.

The energy data log records data for up to 10 years; for example, if the unit starts operating in 2023, by the time 2035 is reached, only data from 2025 to 2035 can be viewed.

3.6.2.7 Error Information

Unit fault history. The first column shows the unit number, if slave units are available. Press the Menu key for 5 seconds to clear all fault records.

3.6.2.8 Frequently Asked Questions (FAQ)

Assistance for frequently asked questions (FAQ) regarding the appliance.

3.6.3 Implementing

The Test run function is used to check the operation of the valves, air venting, circulation pump operation, cooling, heating, and domestic hot water heating.

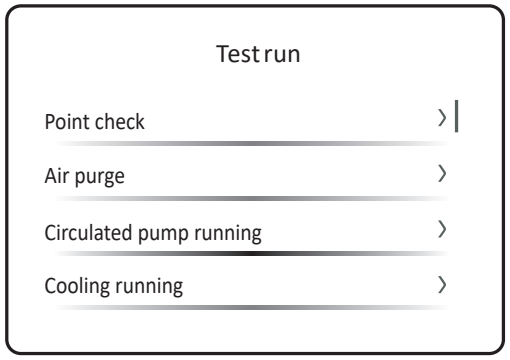

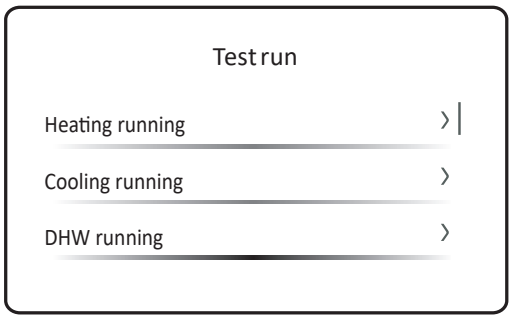

189

3.6.3.1 Actuator operational test

During actuator commissioning, the unit protection function is disabled.Excessive use may damage components.

Check that each actuator is in good working condition:

1. Enter the technician settings menu (see 9.2 Configuration).
2. Find "Test run" and start the procedure.
3. Find "Point check" and start the procedure.
4. Select the actuator and press ○ to activate or deactivate it.ON status indicates that the actuator is activated, while OFF indicates that the actuator is deactivated.

Actuator list:

No.	Code	Description	Notes
1	SV2	Summer/winter diverter valve	
2	SV3	Zone 2 mixing valve	
3	PUMP_I	Integrated circulation pump	
4	PUMP_O	Additional circulation pump (for Zone 1)	
5	PUMP_C	Zone 2 pump	
6	IBH	External system heating electric heater	
7	SV1	DHW three-way valve	Not visible if the DHW circuit is disabled
8	PUMP_D	DHW pump	Not visible if the DHW circuit is disabled
9	PUMP_S	Solar thermal circuit circulation pump	Not visible if the DHW circuit is disabled
10	TBH	DHW tank electric heater	Not visible if the DHW circuit is disabled

During actuator commissioning, the unit protection function is disabled.Excessive use may damage components.

3.6.3.2 Air purging

During actuator commissioning, the unit protection function is disabled.Excessive use may damage components.

To remove residual air from the water circuit:

1. Enter the technician settings menu (see 9.2 Configuration).
2. select "Test run" and enter the process;
3. select "Air purge" and enter the process;
4. select "Air purge" and press ○ to activate or deactivate the air purge function. ◐ indicates that the air purge function is activated and ◑ indicates that the air purge function is deactivated.

Parameters:

"Air vent pump_i output"	**To set the pump output. The higher the value, the greater the output delivered by the pump.**
"Air vent running time"	To set the duration of the air purging. When the set time expires, the air purge is deactivated.
"Status check"	Additional operating parameters are available.

3.6.3.3 Operation test

Check that the unit is in good working condition:

- Enter the technician settings menu (see paragraph 1.21 "Configuration");
- select "Test run" and enter the page;
- select "Other" and enter the process;
- select one of the four performance test options:
  - Operation of the circulation pump
  - Cooling operation
  - Heating operation
  - Domestic hot water operation
- Press ○ to run the test.During the test, press ○, select OK and confirm to return to the higher level.

During the performance test, the target temperature is preset and cannot be modified.
If the outdoor temperature is outside the operating temperature range, the unit may not operate or may not deliver the required capacity.

In circulation pump mode, if the flow rate is outside the recommended flow rate range, make appropriate adjustments to the installation and ensure that the flow rate in the system is guaranteed under all conditions.

3.6.3.4 Minimum flow rate check

1. Check the hydraulic configuration to identify heating circuits that can be closed by mechanical, electronic, or other types of valves.
2. Close all heating circuits that can be closed.
3. Start and run the circulator (see paragraph 1.11 "Circulation pump").
4. Read the flow rate* and adjust the bypass valve settings until the set value reaches the minimum required flow rate + 2 l/min.

(*) During the pump operation test, the unit may operate below the minimum required flow rate.

3.6.4 Energy-saving tips

Ambient temperature tips

- Ensure that the desired ambient temperature is never too high (in heating mode) or too low (in cooling mode) and is always set according to your actual needs. An increase/decrease of one degree Celsius can save up to 6% of heating/cooling costs.
- Do not increase or decrease the desired ambient temperature to accelerate the heating/cooling of the space, as this cannot speed up the heating/cooling process.
- If the system is equipped with slow heat emitters (such as underfloor heating), avoid large fluctuations in the desired ambient temperature and do not lower or raise the ambient temperature excessively. Otherwise, more time and energy will be required to heat/cool the room again.
- Use a weekly schedule to meet normal space heating or cooling requirements. If necessary, you can easily deviate from the schedule:
  - For shorter periods: the scheduled ambient temperature can be overridden until the next scheduled action starts. For example, this can be done when hosting a party or when going out for a couple of hours.
  - For longer periods: the holiday mode can be used.

DHW tank temperature tips

- Use a weekly schedule to meet normal domestic hot water requirements (in scheduled mode only).
- Schedule the DHW tank to be heated to a preset value during the night, when the space heating demand is low.
- If heating the DHW tank at night only is not sufficient, schedule an additional DHW tank heating to a preset value during the day.
- Ensure that the desired DHW tank temperature is not too high. For example, after installation, lower the DHW tank temperature by 1 °C each day and check whether the hot water supply is still sufficient.
- Schedule the DHW pump to operate only during the periods of the day when instant hot water is needed, such as in the morning and evening.

3.7 TROUBLESHOOTING

This section provides useful information for the diagnosis and correction of certain problems which can occur in the unit.

3.7.1 General guidelines

1. Before starting the troubleshooting procedure, visually inspect the unit and look for obvious defects such as loose connections or faulty wiring.
2. When a safety device is triggered, stop the unit and identify the cause of the triggering before resetting the safety device.Under no circumstances shall safety devices be bypassed or unit parameters modified.If the cause of the problem cannot be found, contact the local dealer.
3. If the safety valve does not work properly or needs to be replaced, always reconnect the flexible hose connected to the safety valve to prevent water from escaping from the unit.

For issues relating to the optional solar kit for domestic hot water heating, refer to the troubleshooting section in the kit documentation.

3.7.2 Typical faults

Symptom 1: the unit is on but is not operating in cooling or heating mode as expected

POSSIBLE CAUSE	TROUBLESHOOTING GUIDE
Incorrect temperature setting	Check the parameters (T4HMAX and T4HMIN in heating mode; T4CMAX and T4CMIN in cooling mode; T4DHWMAX and T4DHWMIN in DHW mode). For the parameter range, see paragraph 3.9 "Operation parameters").
Water flow too low	Check that all shut-off valves in the water circuit are in the correct position. Check if the water filter is clogged. Make sure there is no air in the water system. Check the water pressure (water pressure must be greater than or equal to 1.5 bar). Ensure the expansion vessel is not broken.
Insufficient water volume in the system	Ensure that the water volume in the installation exceeds the minimum required value.

Symptom 2: the unit is on but the compressor does not start

POSSIBLE CAUSE	TROUBLESHOOTING GUIDE
The unit might be working outside of its operation range (water temperature too low).	In the event of low water temperature, the system starts the backup heater to reach the minimum water temperature (12 °C) first. Check that the backup heater power supply is correct. Check that the backup heater thermal fuse is closed. Check that the backup heater thermal protection has not been triggered. Check that the backup heater contactors are not faulty.

Symptom 3: noise is being generated by the pump (cavitation).

POSSIBLE CAUSE	TROUBLESHOOTING GUIDE
Air in the system.	Purge the air.
Water pressure too low at the pump inlet	Check the water pressure (water pressure must be greater than or equal to 1.5 bar). Check that the expansion vessel is not damaged. Check that the expansion vessel pre-pressure is set correctly.

Symptom 4: the water safety valve opens.

POSSIBLE CAUSE	TROUBLESHOOTING GUIDE
Damaged expansion vessel	Replace the expansion vessel.
Water pressure in the system above 0.3 MPa.	Ensure that the water pressure in the installation is between 0.10 and 0.20 MPa.

Symptom 5: the water safety valve leaks.

POSSIBLE CAUSE	TROUBLESHOOTING GUIDE
Blockage of the water pressure safety valve outlet	Check that the safety valve is operating correctly by turning the black knob of the valve anticlockwise (if no clicking sound is heard, contact your local dealer). If water continues to flow out of the unit, close the shut-off valves at both the water inlet and outlet, then contact your local dealer.

Symptom 6: insufficient heating capacity at low outdoor temperature.

POSSIBLE CAUSE	TROUBLESHOOTING GUIDE
Backup heater not activated	Check whether the IBH function is enabled. Check whether the thermal protection of the backup heater has been triggered. Check whether the supplementary electric heater is operating. The supplementary electric heater and the DHW tank electric heater cannot operate simultaneously.
Excessive heat pump capacity used for domestic hot water heating (applicable only to installations with a DHW tank).	Check that "t_DHWHP_MAX" and "t_DHWHP_RESTRICT" are configured appropriately: ensure that "DHW PRIORITY" in the wired controller is disabled; enable "T4_TBH_ON" in the wired controller for service (see paragraph 3.6 "Support") to activate the DHW tank electric heater for domestic hot water heating.

Symptom 7: the unit cannot switch immediately from Heating mode to DHW mode.

POSSIBLE CAUSE	TROUBLESHOOTING GUIDE
DHW tank volume too small and low position of the water temperature sensor	Set "dT1S5" to the maximum value and "t_DHWHP_RESTRICT" to the minimum value. Set dT1SH to 2 °C. Enable TBH. The TBH must be controlled by the ODU. If IBH is available, enable it. The heat pump will start once the start-up requirements are met. If neither TBH nor IBH is available, try changing the position of T5 sensor.

Symptom 8: the unit cannot switch immediately from DHW mode to Heating mode.

POSSIBLE CAUSE	TROUBLESHOOTING GUIDE
Small heat exchanger coil for space heating	Set "t_DHWHP_MAX" to the minimum value. Suggested value is 60 minutes. If the circulation pump at the unit outlet is not controlled by the unit, try connecting it to the unit. Add a 3-way valve at the fan coil inlet to ensure sufficient water flow.
Low space heating load	Normal, heating is not required.
Disinfection function enabled without TBH	Disable the disinfection function. Add a TBH or IBH for DHW operation.
The QUICK WATER function is activated manually after the domestic hot water meets the require-ments, and the heat pump does not switch to air conditioning mode in time when cooling/heating is required.	Manually deactivate the QUICK WATER function.
At low ambient temperature, the domestic hot water is insufficient and the IBH does not operate or does not operate in time.	Set "T4DHWMIN". Suggested value is greater than or equal to –5 °C. Set "T4_TBH_ON". Suggested value is greater than or equal to 5° C.
DHW Mode Priority	If the unit is connected to an IBH, when the ODU fails, the hydraulic module board must operate in DHW mode until the water temperature reaches the set value before switching to Heating mode.

Symptom 9: The heat pump stops operating in DHW mode even though the set temperature has not been reached, and space heating is required but the unit remains in DHW mode.

POSSIBLE CAUSE	TROUBLESHOOTING GUIDE
Reduced coil surface area in the tank	Like symptom 7
TBH not available	The heat pump remains in DHW mode until "t_DHWHP_MAX" or the set temperature is reached. Add a TBH for DHW operation. The TBH must be controlled by the unit.

3.8 FAULT AND ANOMALY SIGNALS

The explanation of each fault code is shown on the wired controller. Reset the unit by switching it off and on again.
If the unit reset is not effective, contact your local dealer.

In winter, if the unit experiences an E0 or Hb malfunction and is not repaired in time, the water pump and pipework may be damaged due to freezing.
Take appropriate measures to remedy the E0 and Hb malfunction.

3.8.1 Hydraulic circuit faults

Error Code	Supervision System Error Code	Anomaly signalled	Display	Notes
E0	1	Water flow interruption (E8 occurring 10 times)	User interface and main control board	
E8	9	Water flow protection	User interface and main control board	

3.8.2 Communication faults

Error Code	Supervision System Error Code	Anomaly signalled	Display	Notes
E2	3	Communication fault between the user interface and the main control board	User interface and main control board	
H0	39	Main control board communication fault	User interface and main control board	
H1	40	Communication fault between the main control board and the inverter board	User interface and main control board	
Hd	52	Hd The communication fault between master unit and Slave unit.	User interface and main control board	

3.8.3 Sensor faults

Error Code	Supervision System Error Code	Anomaly signalled	Display	Notes
E3	4	Electric heater/AHS outlet water temperature sensor T1 fault	User interface and main control board	
E4	5	DHW tank water temperature sensor T5 fault	User interface and main control board	
E5	6	Outdoor unit heat exchanger lower temperature sensor T3 fault	User interface and main control board	
E6	7	Ambient temperature sensor T4 fault	User interface and main control board	
E7	8	Buffer tank temperature sensor/final system outlet water temperature sensor in cascade configuration Tbt fault	User interface and main control board	
E9	10	Return air temperature sensor Th fault	User interface and main control board	
EA	11	Discharge temperature sensor Tp fault	User interface and main control board	
Eb	12	Solar panel temperature sensor Tsolar fault	User interface and main control board	
Ec	13	DHW tank water temperature sensor T5_2 fault (Reserved)	User interface and main control board	
Ed	14	Water inlet temperature sensor fault of the plate heat exchanger Tw_in	User interface and main control board	
FC1	-	Water outlet temperature sensor fault of the outdoor unit heat exchanger TL	User interface and main control board	
H2	41	Refrigerant outlet temperature sensor fault of the plate heat exchanger T2	User interface and main control board	
H3	42	Refrigerant inlet temperature sensor fault of the plate heat exchanger T2B	User interface and main control board	
H5	44	Ambient temperature sensor Ta fault	User interface and main control board	
H8	47	High-pressure sensor fault H-SEN	User interface and main control board	
H9	48	Zone 2 water flow temperature sensor fault Tw2	User interface and main control board	
HA	49	Water outlet temperature sensor fault of the plate heat exchanger Tw_out	User interface and main control board	
P21	-	Low-pressure sensor fault L-SEN	User interface and main control board	
P27	-	H-SEN and L-SEN connected in reverse (detection with compressor off)	User interface and main control board	

3.8.4 Electrical voltage faults

Error Code	Supervision System Error Code	Anomaly signalled	Display	Notes
E1	2	Phase loss or phase reversal	User interface and main control board	Three-phase unit
H7	46	Overvoltage and undervoltage protection	User interface and main control board	

3.8.5 Protection codes

Error Code	Supervision System Error Code	Anomaly signalled	Display	Notes
P0	20	Low-pressure protection	User interface and main control board	
P1	21	High-pressure switch protection	User interface and main control board	
P3	23	Overcurrent protection	User interface and main control board	
P4	24	Compressor protection against excessively high discharge temperatures	User interface and main control board	
Pd	33	Protection against excessively high condensing temperatures in cooling mode	User interface and main control board	
HP	57	Low-pressure protection in cooling mode	User interface and main control board	
bA	-	Protection against T4 sensors out of operating range	User interface and main control board	
PP	38	Protection against abnormal temperature difference between outlet water and inlet water	User interface and main control board	
Hb	50	PP occurring 3 times in Heating/DHW mode	User interface and main control board	
P5	25	High temperature difference between outlet water and inlet water	User interface and main control board	
F75	-	Protection against insufficient discharge superheat	User interface and main control board	

3.8.6 Inverter module faults/protections

Error Code	Supervision System Error Code	Anomaly signalled	Display	Notes
F1	116	DC bus undervoltage protection	User interface and main control board	Single-phase unit
C7	65	IPM module high-temperature protection	User interface and main control board	
H4	43	"L1*" occurring 3 times within 60 minutes	User interface and main control board	
L1E	-	Hardware overcurrent protection	Main control board	
L11	-	Instantaneous phase overcurrent protection	Main control board	
L12	-	Continuous phase overcurrent protection for 30 seconds	Main control board	
L2E	-	Overtemperature protection	Main control board	
L3E	-	Bus voltage too low fault	Main control board	
L31	-	Bus voltage too high fault	Main control board	
L32	-	Bus voltage excessively high fault	Main control board	
L34	-	Three-phase power supply phase loss fault	Main control board	Three-phase unit
L43	-	Phase current sampling bias	Main control board	
L45	-	Fan motor code mismatch fault	Main control board	
L46	-	IPM protection (FO)	Main control board	
L47	-	Module type mismatch	Main control board	
L5E	-	Unable to start motor	Main control board	
L52	-	Motor lock protection	Main control board	
L6E	-	Phase loss protection	Main control board	
L61	-	Compressor terminal short-circuit protection	Main control board	
L65	-	IPM short-circuit protection	Main control board	
LBE	-	High-pressure switch operation	Main control board	
LB7	-	PED bH fault	Main control board	
LCE	-	PFC hardware overcurrent protection	Main control board	Three-phase unit
LC1	-	PFC software protection against instantaneous overcurrents	Main control board	Three-phase unit
LC2	-	PFC continuous software protection against overcurrents for 30 seconds	Main control board	Three-phase unit
LC3	-	PFC low-voltage protection	Main control board	Three-phase unit
LC4	-	PFC power factor below 0.8	Main control board	Three-phase unit
LC5	-	PFC RMS value overcurrent protection	Main control board	Three-phase unit
LC6	-	PFC1 channel hardware overcurrent protection	Main control board	Three-phase unit

Error Code	Supervision System Error Code	Anomaly signalled	Display	Notes
LC7	-	PFC2 channel hardware overcurrent protection	Main control board	Three-phase unit
LC8	-	PFC3 channel hardware overcurrent protection	Main control board	Three-phase unit
LC9	-	PFC module overtemperature protection	Main control board	Three-phase unit
LCA	-	PFC module CBC overcurrent fault protection	Main control board	Three-phase unit
LCB	-	PFC bus overvoltage or PFC half-bus overvoltage	Main control board	Three-phase unit
LCC	-	PFC IGBT short circuit	Main control board	Three-phase unit
LCD	-	Abnormal PFC AD sampling bias	Main control board	Three-phase unit
H6	45	Fan fault	User interface and main control board	
HH	55	10 times H6 in 120 minutes.	User interface and main control board	
J1E	-	Hardware overcurrent protection	Main control board	
J11	-	Instantaneous phase current overcurrent protection	Main control board	
J12	-	Continuous phase current overcurrent protection for 30 seconds	Main control board	
J2E	-	Overtemperature protection	Main control board	
J3E	-	Bus voltage too low fault	Main control board	
J31	-	Bus voltage too high fault	Main control board	
J32	-	Bus voltage excessively high fault	Main control board	
J43	-	Abnormal phase current sampling bias	Main control board	
J45	-	Fan motor code mismatch fault	Main control board	
J46	-	IPM PROTECTION (FO)	Main control board	
J47	-	Module type mismatch (after module resistance test)	Main control board	
J5E	-	Unable to start motor	Main control board	
J52	-	Motor lock protection	Main control board	
J6E	-	Phase loss protection	Main control board	
J61	-	Fan terminal short-circuit protection	Main control board	
J65	-	IPM short-circuit protection	Main control board	
HF	54	Unit external EEPROM fault	User interface and main control board	

3.8.7 Others

Error Code	Supervision System Error Code	Anomaly signalled	Display	Notes
Pb	31	Pb is the indicator showing that the system is operating in anti-freeze mode.	Main control board	
CL	-	Water pump communication cable fault.	Main control board	

3.9 OPERATION PARAMETERS

3.9.1 DHW setting

Menu Item	Description	Unit	Range	Default	Set interval	Cus-tomised value
DHW mode	Enable or disable the DHW Mode: 0=NO, 1=YES	-	0-1	1	1	
Disinfect	Enable or disable the disinfection mode: 0=NO, 1=YES	-	0-1	1	1	
DHW priority	Enable or disable the DHW priority mode: 0=NO, 1=YES	-	0-1	1	1	
Pump_D	Enable or disable the DHW pump mode: 0=NO, 1=YES	-	0-1	0	1	
DHW priority time set	Enable or disable the Priority time setting. DHW 0=NO, 1=YES	-	0-1	0	1	
dT5_ON	Temperature differential for DHW mode activation.	°C	1-30	10	1	
dT1S5	The difference value between Twout and T5 in ACS mode.	°C	5-40	10	1	
T4DHWMAX	The maximum outdoor ambient temperature at which the heat pump can operate for domestic hot water heating.	°C	35-46	46	1	
T4DHWMIN	The minimum outdoor ambient temperature at which the heat pump can operate for domestic hot water heating.	°C	-25-30	30	1	
T5S_Disinfect	Target water temperature in the DHW tank in DISINFECTION mode.	°C	60-70	65	1	
t_DI_HIGHTEMP.	The duration time of the highest water temperature in the DHW tank in DISINFECTION mode.	minutes	5-60	15	5	
t_DI_MAX	The maximum time duration of disinfect.	minutes	90-300	210	5	
t_DHWHP_Restrict	Operating time for heating/cooling.	minutes	10-600	30	5	
t_DHWHP_MAX	Maximum continuous operating time of the heat pump in DHW PRIORITY mode.	minutes	10-600	90	5	
Pump_D timer	Enable or disable the DHW pump operation as scheduled and continue to run for the PUMP OPERATING TIME: 0=NO, 1=YES	-	0-1	1	1	
Pump_D running time	The fixed time for which the DHW pump continues to operate.	minutes	5-120	5	1	
Pump_D disinfect	Enable or disable the DHW pump operation when the unit is in DISINFECTION mode and T5 is greater than or equal to T5S_DI-2: 0=NO, 1=YES	-	0-1	1	1	

3.9.2 Cooling setting

Menu Item	Description	Unit	Range	Default	Set interval	Customised value
Cooling mode	Enable or disable the cooling mode: 0=NO,1=YES	-	0-1	1	1	
t_T4_Fresh_C	Weather compensation curve update interval in cooling mode.	Hours	0,5-6	0.5	0.5	
T4CMAX	Highest outdoor ambient operating temperature in cooling mode.	°C	35-52	52	1	
T4CMIN	Lowest outdoor ambient operating temperature in cooling mode.	°C	-5-25	10	1	
dT1SC	Temperature differential for heat pump activation (T1)	°C	2-10	5	1	
dTSC	Temperature difference to start the heat pump (Ta)	°C	1-10	2	1	
Zone 1 C-emission	Zone 1 terminal type for cooling mode: 0=FLH (floor heating), 1=FCU (fan coil unit), 2=RAD (radiator)	-	0-1	1	1	
Zone 2 C-emission	Zone 2 terminal type for cooling mode: 0=FLH (floor heating), 1=FCU (fan coil unit), 2=RAD (radiator)	-	0-1	1	1	

3.9.3 Heating setting

Menu Item	Description	Unit	Range	Default	Set interval	Customised value
Heating mode	Enable or disable the heating mode: 0=NO, 1=YES	-	0-1	1	1	
t_T4_Fresh_H	Weather compensation curve update interval in heating mode.	Hours	0,5-6	0.5	0.5	
T4HMAX	Maximum outdoor ambient operating temperature in heating mode	°C	20-35	25	1	
T4HMIN	Minimum outdoor ambient operating temperature in heating mode.	°C	-25-30	-15	1	
dT1SH	The temperature difference to start the unit (T1)	°C	2-20	5	1	
dTSH	The temperature difference to start the unit (Ta)	°C	1-10	2	1	
Zone 1 H-emission	Zone 1 terminal type for heating mode: 0=FLH (floor heating), 1=FCU (fan coil unit), 2=RAD (radiator)	-	0-2	2	1	
Zone 2 H-emission	Zone 2 terminal type for heating mode: 0=FLH (floor heating), 1=FCU (fan coil unit), 2=RAD (radiator)	-	0-2	0	1	
Force defrost	Enable or disable Force defrost: 0=NO, 1=YES.	-	0-1	0	1	

3.9.4 AUTO mode setting

Menu Item	Description	Unit	Range	Default	Set interval	Customised value
T4AUTOCMIN	Minimum outdoor ambient operating temperature for cooling in automatic mode.	°C	20-29	25	1	
T4AUTOHMAX	Maximum outdoor ambient operating temperature for cooling in automatic mode.	°C	2017-10-01	17	1	

3.9.5 Temperature type setting

Menu Item	Description	Unit	Range	Default	Set interval	Customised value
Water flow temperature.	Enable or disable Water flow temperature: 0=NO, 1=YES	-	0-1	1	1	
Room temp.	Enable or disable Outdoor ambient temperature: 0=NO, 1=YES	-	0-1	0	1	
Double zone	Enable or disable the Dual zone: 0=NO, 1=YES	-	0-1	0	1	

3.9.6 Room thermostat setting

Menu Item	Description	Unit	Range	Default	Set interval	Customised value
Room thermostat	The room thermostat style: 0=NO, 1=Set mode, 2=Single zone, 3=Dual zone	-	0-3	0	1	
Mode set priority	Select the priority mode in Room thermostat: 0=Heating, 1=Cooling	-	0-1	0	1	

3.9.7 Additional heat source

Menu Item	Description	Unit	Range	Default	Set interval	Customised value
IBH function	Select the IBH (integrated electric heater) mode: 0=Heating and DHW, 1=Heating	-	0-1	0 (DHW=valid), 1 (DHW=not valid)	1	
dT1_IBH_ON	Temperature differential between T1S and T1 for integrated electric heater activation.	°C	2-10	5	1	
t_IBH_Delay	Compressor operating time before activation of the first-stage integrated electric heater.	Minutes	15-120	30	5	
T4_IBH_ON	Outdoor ambient temperature for integrated electric heater activation	°C	-15-30	-5	1	
P_IBH1	IBH1 power supply input	kW	0,0-20,0	0	0.5	
P_IBH2	IBH2 power supply input	kW	0,0-20,0	0	0.5	
AHS function	Not available	-	0-2	0	1	
dT5_TBH_OFF	Temperature differential between T5 and T5S (tank water set temperature) for tank electric heater shut-off.	°C	0-10	5	1	
t_TBH_Delay	Compressor operating time before tank electric heater activation.	Minutes	0-240	30	5	
T4_TBH_ON	Outdoor ambient temperature for tank electric heater activation.	°C	-5-50	5	1	
P_TBH	TBH power supply input	kW	0,0-20,0	2	0.5	
Solar function	Enable or disable the Solar function: 0=NO, 1=Solar only, 2=Solar and HP (heat pump)	-	0-2	0	1	
Solar control	Solar pump control (pump_s): 0=SL1SL2, 1=Tsolar	-	0-1	0	1	
Deltatsol	Temperature deviation for solar system operation.	°C	5-20	10	1	

3.9.8 Floor pre-heating

Menu Item	Description	Unit	Range	Default	Set interval	Customised value
Preheating for floor	Enable or disable floor pre-heating: 0=NO, 1=YES	-	0-1	0	1	
T1S	Set water outlet temperature during the first floor pre-heating phase	°C	25-35	25	1	
t_ARSTH	Operating time for the first floor pre-heating phase	Hours	48-96	72	12	
Floor drying up	Enable or disable floor drying: 0=NO, 1=YES	-	0-1	0	1	
t_Dryup	Temperature rise days for floor drying / floor drying days.	Days	4-15	8	1	
t_Highpeak	Floor drying days.	Days	3-7	5	1	
t_Drydown	Temperature reduction days for floor drying.	Days	4-15	5	1	
t_Drypeak	Water outlet temperature for floor drying	°C	30-55	45	1	
Start time	Floor drying start time	h/min	0:00-23:30	00:00	1/30	
Start date	Floor drying start date	dd/mm/yyyy	current date+1-31/12/2099	Current date+1	1/1/1	

3.9.9 Automatic restart

Menu Item	Description	Unit	Range	Default	Set interval	Customised value
Auto restart cooling/heating mode	Enable or disable automatic restart of cooling/heating mode: 0=NO, 1=YES	-	0-1	1	1	
Auto restart DHW mode	Enable or disable automatic restart of DHW mode: 0=NO, 1=YES	-	0-1	1	1	

3.9.10 Consumption limitation

Menu Item	Description	Unit	Range	Default	Set interval	Customised value
Power input limitation	Energy consumption limitation type	-	1-8	1	1	

3.9.11 Input definition

Menu Item	Description	Unit	Range	Default	Set interval	Customised value
M1 M2	Define the function of switch M1M2: 0=Remote ON/OFF, 1=TBH ON/OFF	-	0-2	0	1	
Tbt	Enable or disable TBT: 0=NO, 1=YES	-	0-1	0	1	
P_X port	Select the function of the P_X port: 0=Defrost, 1=Alarm	-	0-1	0	1	
Pump_I silent output	Silent function setting Pump_I, 0=NO, 1=YES	-	0-1	0	1	
Mixing valve SV3	Mixing valve setting: SV3, 0=NO, 1=YES	-	0-1	0	1	
Mixing valve SV3 adjustment	SV3 mixing valve adjustment setting	sec.	60-240	120	30	
Anti-freeze valve	Anti-freeze valve setting, 0=NO, 1=YES	-	0-1	0	1	

3.9.12 Cascade setting

Menu Item	Description	Unit	Range	Default	Set interval	Customised value
PER_START	Percentage of units in operation out of all units	%	10-100	10	10	
TIME_ADJUST	Time interval for determining the need to load/unload the unit.	Minutes	1-60	5	1	

3.9.13 HMI address setting

Menu Item	Description	Unit	Range	Default	Set interval	Customised value
HMI address for BMS	Set the HMI address code for BMS	-	1-255	1	1	
Stop BIT	Upper computer Stop BIT: 1=Stop BIT1, 2=Stop BIT2	-	1-2	1	1	

3.9.14 Common setting

Menu Item	Description	Unit	Range	Default	Set interval	Customised value
t_Delay pump	Compressor operating time before pump activation.	Minutes	0,5-20,0	2,0	0.5	
t1_Antilock pump	Pump anti-seize interval.	Hours	5-48	24	1	
t2_Antilock pump run	Pump anti-seize operating time	sec.	0-300	60	30	
t1_Antilock SV	Valve anti-seize interval	Hours	5-48	24	1	
t2_Antilock SV run	Valve anti-seize operating time	sec.	0-120	30	10	
Ta-adj.	Corrected Ta value within the wired controller.	°C	-10-10	0	1	
Pump_I silent output	Maximum output limitation of Pump_I	%	50-100	100	5	
Energy metering	Enable or disable energy analysis: 0=NO, 1=YES	-	0-1	1	1	
Pump_O	Additional circulation pump operation: 0=Auto (controlled by the unit), 1=ON (continuous operation)	-	0-1	0	1	
Glycol	Glycol application: 0=Without glycol,1=With glycol	-	0-1	0	1	
Glycol concentration	Added glycol concentration.	%	10-30	10	5	
Pump_I minimum output	Circulation pump - Pump_I lower operating limit.	%	30-80	30	5	

3.9.15 Smart function setting.

Menu Item	Description	Unit	Range	Default	Set interval	Customised value
Energy correction	Correction for energy analysis.	%	-50-50	0	5	
Smart grid	Enable or disable the smart grid function: 0=NO, 1=YES	-	0-1	0	1	
Power limitation setting	Smart grid power limit setting.	kW	0-4,2	0	0.1	

Set P_IBH1, P_IBH2, P_TBH according to the field installation.If the values differ from the actual ones, the energy measurement calculation may deviate from the actual situation.

3.10 USER SETTINGS PARAMETERS

3.10.1 Mode and temperature

NO.	Code	Description		Unit	Range	Default	Set interval	Customised value
Mod.	Operating mode	Operating mode setting: 1 = Auto; 2 = Cooling; 3 = Heating.			1-3	3		
Set temperature	T1S	Water outlet temperature (Zone 1)	For cooling FCU	°C	5-25	12	1	
			For cooling FLH / RAD	°C	18/25	23	1	
			For heating FLH	°C	25/55	30	1	
			For heating FCU / RAD	°C	35/80	40	1	
	T1S2	Water outlet temperature (Zone 2)	For heating FLH	°C	25/55	30	1	
			For heating FCU / RAD	°C	35/80	40	1	
	TS	Set ambient temperature (Ta)	Cooling	°C	17-30	17	0,5	
			Central heating	°C	17-30	17	0,5	
			AUTO	°C	17-30	17	0,5	
	T5S (DHW MODE = Yes)	DHW set temperature		°C	20-70	50	1	

3.10.2 Schedule

NO.	Code	Description		Unit	Range	Default	Set interval	Customised value
Zone 1 day timer	TIMER 1 - TIMER 6	Enable: 0 = Inactive; 1 = Active.			0-1	0	1	
	TIMER 1 - TIMER 6 Time	Timer start time		h/min	00:00 - 23:50	00:00	1/10	
	TIMER 1 - TIMER 6 Mod.	Timer operating mode: 2 = Cooling; 1 = Heating; 0 = Off.			0-2	0	1	
	TIMER 1 - TIMER 6 Temp.	Timer temperature setting.	For cooling FCU	°C	5-25	12	1	
			For cooling FLH / RAD	°C	18-25	23	1	
			For heating FLH	°C	25-55	30	1	
			For heating FCU / RAD	°C	35-80	40	1	
			Set ambient heating temperature Ta	°C	17-30	24	0,5	
			Set ambient cooling temperature Ta	°C	17-30	24	0,5	
Zone 2 day timer	TIMER 1 - TIMER 6	Enable: 0 = Inactive; 1 = Active.			0-1	0	1	
	TIMER 1 - TIMER 6 Time	Timer start time		h/min	00:00 - 23:50	00:00	1/10	
	TIMER 1 - TIMER 6 Mod.	Timer operating mode: 1 = Heating; 0 = Off.			0-1	0	1	
	TIMER 1 - TIMER 6 Temp.	Timer temperature setting.	For heating FLH	°C	25-55	30	1	
			For heating FCU / RAD	°C	35-80	40	1	
			Set ambient heating temperature Ta	°C	17-30	24	0,5	
Zone 1 weekly schedule	TIMER 1 - TIMER 6	Enable: 0=inactive; 1=active.			0-1	0	1	
	TIMER 1 - TIMER 6 Time	Timer start time		h/min	00:00 - 23:50	00:00	1/10	
	TIMER 1 - TIMER 6 DHW	Timer operating mode 1=DHW, 0=OFF			0-1	1	1	

NO.	Code	Description		Unit	Range	De-fault	Set inter-val	Cus-tomised value
Zone 1 weekly schedule	TIMER 1 - TIMER 6 Temp.	Timer temperature setting.			20-70	50	1	
	Schedule 1 – Schedule 4	Enable: 0=inactive, 1=active			0-1	0	1	
	Schedule 1 - Schedule 4 Day Sunday / Monday / Tuesday / Wednesday / Thursday / Friday / Saturday	Enable: 0=inactive, 1=active (if all days are active, "Every day" is displayed)			0-1	0	1	
	Command 1 - Command 4	Enable			0-1	0	1	
	Command 1 - Command 4 Time	Timer start time		h/min	00:00 - 23:50	00:00	1/10	
	Command 1 - Command 4 Mode	Timer operating mode: 2=Cooling, 1=Heating, 0=OFF			0-1	0	1	
	Command 1 - Command 4 Temp.	Timer temperature setting.	For cooling FCU	°C	5-25	12	1	
			For cooling FLH / RAD	°C	18-25	23	1	
			For heating FLH	°C	25-55	30	1	
			For heating FCU / RAD	°C	35-80	40	1	
			Set ambient heating temperature Ta	°C	17-30	24	0,5	
			Set ambient cooling temperature Ta	°C	17-30	24	0,5	
Zone 2 weekly schedule	TIMER 1 - TIMER 6	Enable: 0=inactive; 1=active.			0-1	0	1	
	TIMER 1 - TIMER 6 Time	Timer start time		h/min	00:00 - 23:50	00:00	1/10	
	TIMER 1 - TIMER 6 DHW	Timer operating mode 1=DHW, 0=OFF			0-1	1	1	

NO.	Code	Description		Unit	Range	De-fault	Set inter-val	Cus-tomised value
Zone 2 weekly schedule	TIMER 1 - TIMER 6 Temp.	Timer temperature setting.			20-70	50	1	
	Schedule 1 – Schedule 4	Enable: 0=inactive, 1=active			0-1	0	1	
	Schedule 1 - Schedule 4 Day Sunday / Monday / Tuesday / Wednesday / Thursday / Friday / Saturday	Enable: 0=inactive, 1=active (if all days are active, "Every day" is displayed)			0-1	0	1	
	Command 1 - Command 4	Enable: 0=inactive; 1=active.			0-1	0	1	
	Command 1 - Command 4 Time	Timer start time		h/min	00:00 - 23:50	00:00	1/10	
	Command 1 - Command 4 Mode	Timer operating mode 1=Heating, 0=OFF			0-1	0	1	
	Command 1 - Command 4 Temp.	Timer tempera-ture setting.	For heating FLH	°C	25-55	30	1	
			For heating FCU / RAD	°C	35-80	40	1	
			Set ambient heating temperature Ta	°C	17-30	24	0,5	
DHW weekly schedule	Schedule 1 – Schedule 4	Enable: 0=inactive; 1=active.			0-1	0	1	
	Schedule 1 - Schedule 4 Day Sunday / Monday / Tuesday / Wednesday / Thursday / Friday / Saturday	Enable: 0=inactive, 1=active (if all days are active, "Every day" is displayed)			0-1	0	1	
	Command 1 - Command 4	Enable: 0=inactive; 1=active.			0-1	0	1	
	Command 1 - Command 4 Time	Timer start time		h/min	00:00 - 23:50	00:00	1/10	
	Command 1 - Command 4 DHW	Timer operating mode 1=Heating, 0=OFF			0-1	0	1	
	Command 1 - Command 4 Temp.	Timer temperature setting.		°C	20-70	50	1	

NO.	Code	Description	Unit	Range	De-fault	Set inter-val	Cus-tomised value
Away-from-home holiday mode	Current status	Enable: 0=inactive; 1=active.		0-1	0	1	
	From	Timer start date	g/m/a	Current date+1 - 12/31/2099	Cur-rent date+1	1/1/1	
	a	Timer end date	g/m/a	Current date+1 - 12/31/2099	Cur-rent date+1	1/1/1	
	Heating mode	Enable: 0=inactive; 1=active.		0-1	1	1	
	Heating temp.	Set temperature for "Away-from-home holiday" mode	°C	20-25	25	1	
	Mod. DHW	Enable: 0=inactive; 1=active.		0-1	1	1	
	DHW Temp.	Set temperature for "Away-from-home holiday" mode	°C	20-25	25	1	
	Disinfect	Enable: 0=inactive; 1=active.		0-1	1	1	
At-home holiday mode	Current status	Enable: 0=inactive; 1=active.		0-1	0	1	
	From	Timer start date	g/m/a	Current date+1 - 12/31/2099	Cur-rent date+1	1/1/1	
	a	Timer end date	g/m/a	Current date+1 - 12/31/2099	Cur-rent date+1	1/1/1	
	Zone 1 holiday timer - Timer 1 - Timer 6	Enable: 0=inactive; 1=active.		0-1	0	1	
	Zone 1 holiday timer - Timer 1 - Timer 6 Time	Timer start time	h/min	00:00-23:50	00:00	1/10	

NO.	Code	Description		Unit	Range	De-fault	Set inter-val	Cus-tomised value
At-home holiday mode	Zone 1 holiday timer - Timer 1 - Timer 6 - Temp.	Timer tempera-ture setting.	For cooling FCU	°C	5-25	12	1	
			For cooling FLH / RAD	°C	18-25	23	1	
			For heating FLH	°C	25-55	30	1	
			For heating FCU / RAD	°C	35-80	40	1	
			Set ambient heating temperature Ta	°C	17-30	24	0,5	
			Set ambient cooling temperature Ta	°C	17-30	24	0,5	
	Zone 2 holiday timer - Timer 1 - Timer 6	Enable: 0=inactive; 1=active.			0-1	0	1	
	Zone 2 holiday timer - Timer 1 - Timer 6 Time	Timer start time		h/min	00:00-23:50	00:00	1/10	
	Zone 2 holiday timer - Timer 1 - Timer 6 - Mode	Timer operating mode: 2 = Cooling; 1 = Heating; 0 = Off.			0-2	0	1	
	Zone 2 holiday timer - Timer 1 - Timer 6 - Temp.	Timer tempera-ture setting.	For heating FLH	°C	25-55	30	1	
			For heating FCU / RAD	°C	35-80	40	1	
			Set ambient cooling temperature Ta	°C	17-30	24	0,5	
	DHW holiday timer - Timer 1 - Timer 6	Enable: 0=inactive; 1=active.			0-1	0	1	
	DHW holiday timer - Timer 1 - Timer 6 Time	Timer start time		h/min	00:00-23:50	00:00	1/10	
	DHW holiday timer - Timer 1 - Timer 6 - Mode	Timer operating mode: 1 = Heating; 0 = Off.			0-1	0	1	
	DHW holiday timer - Timer 1 - Timer 6 - Temp.	Timer temperature setting.		°C	20-70	50	1	

3.10.3 Weather temperature settings

NO.	Code	Description	Unit	Range	De-fault	Set inter-val	Cus-tomised value
Zone 1 heating mode	Temperature curve	Enable: 0=inactive, 1=active		0-1	0	1	
	Temp curve type	Temp curve type 0=Standard, 1=Person., 2=ECO		0-2	0	1	
	Standard - Temperature level	FCU/RAD heating curve		1-8	6	1	
		FLH heating curve		1-8	3	1	
	Standard - Temperature compensation	Zone 1 heating set temperature - curve compensation	°C	-10 - 25	0	1	
	Person. - Temperature setting – T1SetH1	Curve heating set temperature 1	°C	25 - 80	35	1	
	Person. - Temperature setting – T1SetH2	Curve heating set temperature 2	°C	25 - 80	28	1	
	Person. - Temperature setting – T4H1	Curve heating ambient temperature 1	°C	-25 - 35	-5	1	
	Person. - Temperature setting – T4H2	Curve heating ambient temperature 2	°C	-25 - 35	7	1	
	ECO - Tempera-ture level	FLH heating curve		1-8	3	1	
		FCU/RAD heating curve		1-8	6	1	
	ECO timer	Enable: 0=inactive, 1=active		0-1	0	1	
	From	Timer start date	h/min	00:00-23:50	08:00	0,5	
	A	Timer end date	h/min	00:00-23:50	19:00	0,5	

NO.	Code	Description	Unit	Range	De-fault	Set inter-val	Cus-tomised value
Zone 1 cooling mode	Temperature curve	Enable: 0=inactive, 1=active		0-1	0	1	
	Temp curve type	Temp curve type 0=Standard, 1=Person.		0-1	0	1	
	Standard - Temperature level	Cooling curve FLH / RAD		1-8	4	1	
		Cooling curve FCU		1-8	4	1	
	Standard - Temperature compensation	Zone 1 cooling set temperature - curve compensation	°C	-10 - 10	0	1	
	Person. - Temperature setting – T1SetC1	Curve cooling set temperature 1	°C	5 - 25	10	1	
	Person. - Temperature setting – T1SetC2	Curve cooling set temperature 2	°C	5 - 25	16	1	
	Person. - Temperature setting – T4C1	Curve cooling ambient temperature 1	°C	-5 - 46	35	1	
	Person. - Temperature setting – T4C2	Curve cooling ambient temperature 2	°C	-5 - 46	25	1	
Zone 2 heating mode	Temperature curve	Enable: 0=inactive, 1=active		0-1	0	1	
	Temp curve type	Temp curve type 0=Standard, 1=Person., 2=ECO		-01	0	1	
	Standard - Temperature level	FCU/RAD heating curve		1-8	6	1	
		FLH heating curve		1-8	3	1	
	Standard - Temperature compensation	Zone 2 heating set temperature - curve compensation	°C	-10 - 25	0	1	
	Person. - Temperature setting – T1SetH1	Curve heating set temperature 1	°C	25 - 80	35	1	
	Person. - Temperature setting – T1SetH2	Curve heating set temperature 2	°C	25 - 80	28	1	
	Person. - Temperature setting – T4H1	Curve heating ambient temperature 1	°C	-25 - 35	-5	1	
	Person. - Temperature setting – T4H2	Curve heating ambient temperature 2	°C	-25 - 35	7	1	

3.10.4 DHW settings

NO.	Code	Description	Unit	Range	Default	Set interval	Customised value
Disinfect	Current status	Status: OFF=0, ON=1		0-1	1	1	
	Operating day (Sunday / Monday / Tuesday / Wednesday / Thursday / Friday / Saturday)	Enable: 0=inactive, 1=active (if all days are active, "Every day" is displayed)		0-1	Thursday = 1 other = 0	1	
	Start	Start time	h/min	00:00-23:50	23:00	1/10	
Fast DHW	Fast DHW	Status: OFF=0, ON=1		0-1	0	1	
Tank heating	Tank heating	Status: OFF=0, ON=1		0-1	0	1	
DHW pump	DHW pump timer 1-12	Status: OFF=0, ON=1		0-1	0	1	
	DHW pump timer 1-12 time	Start time	h/min	00:00-23:50	23:00	1/10	

3.10.5 Settings

NO.	Code	Description	Unit	Range	Default	Set interval	Customised value
Silent mode	Silent and boost	Enable: OFF=0, ON=1		0-1	0	1	
	Mode setting:	0=Silent, 1=Super silent		0-1	0	1	
	Timer 1	Enable: 0=inactive, 1=active		0-1	0	1	
	From	Start time 1	h/min	00:00-23:50	12:00	1/10	
	a	End time 1	h/min	00:00-23:50	15:00	1/10	
	Timer 2	Enable: 0=inactive, 1=active		0-1	0	1	
	From	Start time 2	h/min	00:00-23:50	12:00	1/10	
	a	End time 2	h/min	00:00-23:50	15:00	1/10	
Backup heater	Backup heater	Enable: 0=OFF, 1=ON		0-1	0	1	
Display settings	Time	Current time	h/min	00:00-23:59	00:00	1/1	
	Date	Current date		1/1/2023-31/12/2099	1/1/203	1	
	Daylight saving time	Daylight saving time setting, 0=OFF, 1=ON		0-1	0	1	
	Start time	Daylight saving time start time	h/min	00:00-23:59	00:00	1/1	
	Start date	Daylight saving time start date	d/m	1/1/2023-31/12/2099	1/3	1/1	
	Elapsed time	Daylight saving time end time	h/min	00:00-23:59	00:00	1/1	
	End date	Daylight saving time end date	d/m	1/1/2023-31/12/2099	3	1/1	
	Language	0=English, 1=Français, 2=Italiano, 3=Español, 4=Polski, 5=Português, 6=Deutsch, 7=Nederlands, 8=Română, 9=Русский, 10=Türkçe, 11=Ελληνικά, 12=Slovenščina, 13=Svenska, 14=Čeština, 15=Slovák, 16=Magyar, 17=Hrvatski, 18=Dansk, 19=українська, 20=Suomalainen, 21=Lietuvių, 22=Eesti keel		0-22	0	1	

NO.	Code	Description	Unit	Range	De-fault	Set inter-val	Cus-tomised value
Display settings	Active backlight	Backlight level		1-3	2	1	
	Acoustic signal	Enable, 0=inactive, 1=active		0-1	1	1	
	Screen lock time	Lock timer	Second	0-300	0	30	
	Decimal separator	Decimal separator setting, 0=Comma, 1=Period		0-1	0	1	
	Display unit	Display unit setting, 0=Metric, 1=Imperial		0-1	0	1	
Force defrost	Force defrost	Enable: 0=Off, 1=On		0-1	0	1	

3.11 COMPLIANCE

We hereby declare that this device complies with the relevant provisions of the RED Directive 2014/53/EU.
For appliances intended for the European Union, the complete copy of the Declaration of Conformity is as follows:

- The manufacturer, Immergas, declares that the type of radio equipment Magis M V2 complies with Directive 2014/53/EU.
- The full text of the EU declaration of conformity is available at the following Internet address: www.immergas.com
- The manufacturer, Immergas, declares that the type of radio equipment Magis M6 V2, Magis M8 V2, Magis M10 V2, Magis M12 V2, Magis M12 T V2, Magis M16 V2, Magis M16 T V2 complies with Directive 2014/53/EU.
- The full text of the EU declaration of conformity is available at the following Internet address: www.immergas.com

4 MAINTENANCE AND SERVICE.

4.1 MAINTENANCE WARNINGS

Checks in the area.
Before starting work on systems containing flammable refrigerants, safety checks must be performed to guarantee that the risk of ignition is reduced to a minimum. Before performing repairs on chilling systems, follow the precautions below.

Work procedure.
The jobs must be carried out according to a consolidated safety procedure to reduce the risk of refrigerant or flammable vapour leaks during work to a minimum.

Work area.
All maintenance personnel and anyone else working in the involved area must be instructed as to the nature of the work carried out. Avoid working in confined spaces. The area in the immediate vicinity of the work field must be appropriately delimited. Make sure that safety conditions are met within the area to prevent the risk of refrigerant leaks.

Refrigerant leak check.
The area must be checked with an adequate refrigerant detector before and during the jobs, to guarantee that the technician is aware of the presence of potentially flammable gas. Make sure that the leak detector is suitable to be used with flammable refrigerants, namely without electric discharges, appropriately sealed or inherently safe.

Presence of a fire extinguisher.
If work needs to be done on the chilling system or its parts that involves naked flames or that can produce heat and/or sparks (brazing, grinding, welding etc.), adequate firefighting devices must be available. Check that there is a powder fire extinguisher or a CO_2 fire extinguisher adjacent to the recharge area.

No source of ignition.
All possible sources of ignition, including lit cigarettes, must be kept sufficiently far from the place of installation, repair, removal and disposal, during which the flammable refrigerant could be released into the surrounding area. Before starting the work, the area around the appliance must be monitored to make sure there are no flammability hazards or ignition risks.
"NO SMOKING" signs must be applied.

Ventilated area.
Make sure that the area is in the open or adequately ventilated before entering therein or performing work involving naked flames or that can produce heat and/or sparks (brazing, grinding, welding etc.). A certain ventilation level must also be guaranteed while carrying out the work. Ventilation must be sufficient so that any gas released does not reach a hazardous concentration.

Checks on the chilling equipment.
When replacing electric components, these must be suitable for the purpose for which they are used and comply with the correct specifications. The manufacturer's guidelines for maintenance and service must be complied with that all times. Should any doubts arise, contact the Authorised Immergas Technical Service for assistance.
- The markings on the appliance must be visible and legible.

Checks on electrical devices.
Repair and maintenance operations on electric components must include preventive safety checks and inspection procedures of the components. If a fault occurs that could jeopardise safety, the circuit must not be powered until the issue has been resolved in a satisfactory way.
If it is not possible to immediately eliminate the fault, but the system needs to keep running, a temporary solution must be found. This must be communicated to the owner of the equipment so that all parties are informed thereof.
The initial safety checks include making sure:
- **That the capacitors are discharged: this is essential to avoid the possibility of electrical discharges;**
- **That there are no live components or cables during charging, recovery or purging of the circuit;**
- **That there is continuity in the earth connection**

Repair of sealed components.

a) During repairs of sealed components, all power supplies must be disconnected from the appliance in operation before removing the sealed covers, etc. If it is absolutely necessary that the appliance be energised during maintenance, a permanently operated leak detection device must be used, at the most critical point, to prevent a potentially hazardous situation.

b) Special attention must be paid to the following to make sure that, while working on electric parts, the enclosure is not tampered with in such a way as to alter the protection level. This includes damage to cables, an excessive number of connections, terminals non-conforming to the original specifications, damage to gaskets, incorrect assembly of cable glands, etc.

- Check that the appliance is installed in compliance with standards in force.
- Make sure that the gaskets or sealing materials are not degraded to such a point that flammable atmospheres may enter. The spare parts must comply with the specifications of the manufacturer.

The use of silicone sealant could inhibit the effectiveness of some types of leak detection equipment. Inherently safe components must not be isolated before working on them.

Repair of inherently safe components.

Do not apply permanent inductive or capacitive loads to the circuit without first having checked that they do not exceed the voltage and current allowed for the instruments in use. Inherently safe components are the only ones on which it is possible to work when live in the presence of a flammable atmosphere. The test equipment must be correctly classified. Only replace the components with the spare parts indicated by the manufacturer. The use of other components could trigger refrigerant flammability following a leak into the atmosphere.

Wiring.

Check that wiring is not subject to wear, corrosion, excessive pressure, vibrations, sharp edges or other adverse environmental effects. The check must also take into consideration the consequences of aging or of continuous vibrations coming from sources such as compressors or fans.

Detection of flammable refrigerants.

Under no circumstances must potential sources of ignition be used to look for or detect refrigerant leaks. Halide torches (or any other detector that uses naked flames) must not be used.

Leak detection methods.
Do not use possible sources of ignition when searching for leaks. Under no circumstances must naked flame detectors be used.Electronic leak detectors must be used to detect flammable refrigerants, but their sensitivity might not be adequate or require recalibration (leak detectors must be calibrated in a refrigerant-free area). Make sure that the detector is not a potential source of ignition and that it is suitable for the refrigerant.The leak detection appliance must be set at an LFL (lower flammability limit) percentage of the refrigerant and calibrated for the refrigerant used; the appropriate percentage of gas is confirmed (25% at maximum).Leak detection fluids can be used with the majority of refrigerants, but detergents containing chlorine must not be used as this element can react with the refrigerant and corrode the copper pipes. If there is a suspected leak, all naked flames must be removed or put out.

Removal and discharge.
When interacting on the refrigerant circuit to perform repairs or for any other purpose, conventional procedures must be followed. It will be important to abide by consolidated practice as flammability is a very important factor to be taken into consideration. The following procedure must be complied with:

- **Remove the refrigerant;**
- **Purge the circuit with inert gas;**
- **Discharge;**
- **Purge again with inert gas;**
- **Restore the circuit by cutting or performing a brazing intervention.**

The refrigerant charge must be recovered in appropriate recovery cylinders. The circuit must be washed with nitrogen to remove impurities from the appliance. This process might need to be repeated several times.
Compressed air or oxygen must not be used for this activity.
Make sure that the vent of the vacuum pump is not exposed to triggering sources with a simultaneous ventilation source.

Decommissioning.

Before performing this operation, the technician must have extensive knowledge of the appliance and all its details.

a) Become acquainted with the appliance and its operation.

b) Disconnect the electric power to the appliance.

c) Before starting the activity, proceed as follows:

Ascertain, where necessary, the availability of mechanical equipment to handle the refrigerant cylinders.

Check that personal protective equipment is available and used correctly.

Make sure that the recovery operation is constantly supervised by qualified personnel certified pursuant to standards in force.

The equipment and the recovery cylinders comply with current regulations.

d) Empty the chilling circuit by means of the specific service ports.

e) If it is not possible to discharge the circuit by means of the specific service ports, make a "manifold" so that the refrigerant can be removed from other points of the system.

f) Make sure that the cylinder is placed on the scale before proceeding with recovery.

g) Start the recovery machine and follow the instructions given by the manufacturer.

h) Do not overfill the cylinders. (Do not exceed 80% of the charge volume of the liquid).

i) Do not exceed the maximum working pressure of the cylinder, not even temporarily.

j) When the cylinders have been filled to the maximum capacity and the intervention has been completed, make sure that these and the equipment are immediately removed from the area and that all shut-off valves on the equipment are closed.

k) The recovered refrigerant cannot be recharged into another chilling system unless it has been recycled or regenerated.

Labelling.

The appliance must be labelled with an indication that it has been decommissioned and the refrigerant emptied. The label must be dated and signed. Make sure that there are labels on the appliance indicating that it contains flammable refrigerant.

4.2 MAINTENANCE.

For safety purposes, the maintenance technician is required to carefully read the contents of this manual.
To guarantee ideal operation of the product, a series of checks and inspections on it and its electrical connections from and to the product must be performed at regular intervals.
Maintenance must be carried out by an authorised Immergas technician.

ELECTRICAL SPARK
- **Before performing any maintenance or repairs, disconnect power to the electric control switchgear.**
- **Do not touch any live part for at least 10 minutes after disconnecting power.**
- **The compressor heater can even work in standby.**
- **It is prohibited to touch conductive parts.**
- **It is prohibited to wet the unit with water. This operation could trigger electrical discharges or fire.**
- **It is prohibited to leave the unit unattended if the protective casing has been removed.**

The following checks must be carried out **at least once a year** by companies qualified and certified pursuant to standards in force (unless there are more stringent provisions depending on the installation context and/or current relevant legislation).

- General
  - Check that all parts are in the correct position and in good condition.
- Water circuit
  - Check the water pressure: if below 1 bar, restore it.
  - Clean the water filter.
  - Check the operation and condition of the flow switch.
  - Check that the safety valve works properly by turning the black knob on the valve anti-clockwise:If no noise is heard, contact an authorised Immergas technician;if water continues to leak from the unit, first close the water inlet and outlet shut-off valves and then contact an authorised Immergas technician.
  - Check the condition of the backup heater insulation (if the optional kit has been installed).
  - Check for any leaks in the water circuit; pay particular attention if an antifreeze agent is applied.
  - Check the cleanliness and general condition of the DHW tank.
  - Verify that the water characteristics meet all requirements.
- Wiring and electrical components
  - Check the operation and condition of the temperature sensors.
  - Check the condition of the wiring and cables.
  - Check the operation and condition of the contactors and circuit breakers.
- Refrigerant circuit
  - Check for any leaks in the refrigerant circuit.

5 TECHNICAL DATA

5.1 GENERAL PRODUCT DATA (SINGLE-PHASE)

		MAGIS M6 V2	MAGIS M8 V2	MAGIS M10 V2	MAGIS M12 V2	MAGIS M16 V2
Coolant						
Type of refrigerant	-	R290				
Coolant load	g	700		1100	1250	
GWP	-	0,02				
tCO_2 equivalent	-	0,00001		0,00002	0,00003	
Control method	-	EEV				
Fan						
Number	-	1				
Air flow rate (heating)	m^3/h	2770	4030		4450	5040
Compressor						
Type	-	Twin				
Primary circuit						
Expansion vessel: Pre-charge	kPa (bar)	1.5				
System filling pressure	kPa (bar)	200 (2)				
System						
Minimum circulation flow rate	l/h	500			600	
Minimum volume (excluding internal water volume)*	l	40				
Weight and dimensions						
Weight of unit (with primary circuit empty)	kg	89,5	116,0		133,0	
Weight of unit with packaging	kg	110,0	138,0		155,0	
Dimensions (LxHxD)	mm	717 x 1299 x 426	865 x 1385 x 523			
Dimensions with packaging (LxHxD)	mm	885 x 1375 x 475	1035 x 1465 x 560			
Water connections						
System side water connections - inlet	inches	1,0	1,3			
System side water connections - outlet	inches	1,0	1,3			
Condensate drain	mm	1				
Power supply electrical features 1 (by standard)						
Electrical connection		220 - 240V ~ 50Hz				
Maximum current absorbed	W	3000,0	3600,0	3900,0	5700,0	6400,0
Rated absorbed current	A	13,5	16,0	17,5	25,0	28,0
Other electrical data						
Protection class		IP24				
Primary pump rated power	W	95				
Primary pump rated current	A	0,75				
EEI primary pump		£0.21 Part3				

* The water volume must always be available to the machine.

		MAGIS M6 V2	MAGIS M8 V2	MAGIS M10 V2	MAGIS M12 V2	MAGIS M16 V2
Power cable specification						
Cable designation code		IEC:60245 IEC 57 CENELEC:H05RN-F				
Voltage field	Min/Max	198 .. 264				
MCA (Minimum circuit amperes)	A	13.5	16	17.5	25	28
MFA (Maximum fuse amperes)	A	16	20		32	
Communication cable specification						
Number of wires	-	2				
Type	-	twisted and shielded				
Single wire gauge	mm^2	0,75				
Seasonal efficiency data (average temperature)						
Rated heat output P_{rated}	kW	6	7	8	12	14
Room central heating seasonal energy efficiency η_S	%	150			142	141
Seasonal coefficient of performance (SCOP)	-	3,82	3,81		3,62	3,59
Seasonal efficiency data (low temperature)						
Room central heating seasonal energy efficiency η_S	%	193	200	196	184	181

Data useful for obtaining the incentive under the Thermal Account 3.0 scheme, pursuant to Italian Ministerial Decree of 7 August 2025.

5.1.1 Power and sound pressure data (single-phase)

		MAGIS M6 V2	MAGIS M8 V2	MAGIS M10 V2	MAGIS M12 V2	MAGIS M16 V2
Sound level						
Sound power at nominal load, heating (A7 W35) **	dB(A)	58	60	61	65	69
Sound power level at rated load, heating, for ErP Labelling (A7 W55)***	dB(A)	58	60	61	65	69
Sound power at nominal load, cooling (A35 W7) **	dB(A)	58	60	61	65	69
Sound power at nominal load, cooling (A35 W18) **	dB(A)	58	60	61	65	69
Sound power at partial load, heating (A7 W55) ***	dB(A)	50	51		55	
Sound power level at maximum load, heating	dB(A)	60	62	63	67	70
Sound power level at maximum load, cooling	dB(A)	60	62	63	66	70
Sound power level in silent mode						
Level 1 - Cooling	dB(A)	56	57	58	62	64
Level 2 - Cooling	dB(A)	53	54	55	58	60
Level 3 - Heating	dB(A)	56	58	59	62	64
Level 4 - Heating	dB(A)	53	55	56	58	60
Sound pressure in silent mode						
Level 1 - Cooling*	dB(A)	43	45	46	47	52
Level 2 - Cooling*	dB(A)	40	42	43	44	48
Level 3 - Heating*	dB(A)	44	45	46	47	52
Level 4 - Heating*	dB(A)	42		43		48

* Measurement taken at 1 metre from the appliance.
** Measurement made following the procedure from ISO 3741
*** Measurement made following the procedure from ISO 3743-1 and according to EN12102

5.2 GENERAL PRODUCT DATA (THREE-PHASE)

		MAGIS M12 T V2	MAGIS M16 T V2
Coolant			
Type of refrigerant	-	R290	
Coolant load	g	1250	
GWP	-	0,02	
tCO_2 equivalent	-	0,00003	
Control method	-	EEV	
Fan			
Number	-	1	
Air flow rate (heating)	m^3/h	4450	5040
Compressor			
Type	-	Twin	
Primary circuit			
Expansion vessel: Pre-charge	kPa (bar)	1.5	
System filling pressure	kPa (bar)	200 (2)	
System			
Minimum circulation flow rate	l/h	600	
Minimum volume (excluding internal water volume)*	l	40	
Weight and dimensions			
Weight of unit (with primary circuit empty)	kg	133,5	
Weight of unit with packaging	kg	155,5	
Dimensions (LxHxD)	mm	865 x 1385 x 523	
Dimensions with packaging (LxHxD)	mm	1035 x 1465 x 560	
Water connections			
System side water connections - inlet	inches	1,3	
System side water connections - outlet	inches	1,3	
Condensate drain	mm	1	
Power supply electrical features 1 (by standard)			
Electrical connection		380 - 415V 3N ~ 50Hz	
Maximum current absorbed	W	5700,0	6400,0
Rated absorbed current	A	8,5	9,5
Other electrical data			
Protection class		IP24	
Primary pump rated power	W	95	
Primary pump rated current	A	0,75	
EEI primary pump		£0.21 Part3	

* The water volume must always be available to the machine.

		MAGIS M12 T V2	MAGIS M16 T V2
Power cable specification			
Cable designation code		IEC:60245 IEC 57 CENELEC:H05RN-F	
Voltage field	Min/Max	342 .. 456	
MCA (Minimum circuit amperes)	A	8.5	9.5
MFA (Maximum fuse amperes)	A	16	
Communication cable specification			
Number of wires	-	2	
Type	-	twisted and shielded	
Single wire gauge	mm^2	0,75	
Seasonal efficiency data (average temperature)			
Rated heat output P_{rated}	kW	12	14
Room central heating seasonal energy efficiency η_S	%	142	141
Seasonal coefficient of performance (SCOP)	-	3,62	3,59
Seasonal efficiency data (low temperature)			
Room central heating seasonal energy efficiency η_S	%	184	181

5.2.1 Power and sound pressure data (three-phase)

		MAGIS M12 T V2	MAGIS M16 T V2
Sound level			
Sound power at nominal load, heating (A7 W35) **	dB(A)	65	69
Sound power level at rated load, heating, for ErP Labelling (A7 W55)***	dB(A)	65	69
Sound power at nominal load, cooling (A35 W7) **	dB(A)	65	69
Sound power at nominal load, cooling (A35 W18) **	dB(A)	65	69
Sound power at partial load, heating (A7 W55) ***	dB(A)	55	
Sound power level at maximum load, heating	dB(A)	67	70
Sound power level at maximum load, cooling	dB(A)	66	70
Sound power level in silent mode			
Level 1 - Cooling	dB(A)	62	64
Level 2 - Cooling	dB(A)	58	60
Level 3 - Heating	dB(A)	62	64
Level 4 - Heating	dB(A)	58	60
Sound pressure in silent mode			
Level 1 - Cooling*	dB(A)	47	52
Level 2 - Cooling*	dB(A)	44	48
Level 3 - Heating*	dB(A)	47	52
Level 4 - Heating*	dB(A)	43	48

* Measurement taken at 1 metre from the appliance.
** Measurement made following the procedure from ISO 3741
*** Measurement made following the procedure from ISO 3743-1 and according to EN12102

5.3 PRODUCT OPERATING TEMPERATURES (SINGLE-PHASE)

		MAGIS M6 V2	MAGIS M8 V2	MAGIS M10 V2	MAGIS M12 V2	MAGIS M16 V2
Central heating						
Adjustable central heating temperature (operating field)	°C	+25 ... +75				
Central heating / C.H. outdoor temperature (operating field)	°C	-25 ... +35				
Heating adjustable temperature with enabled integration (working range)	°C	+25 ... +75				
Heating external temperature with enabled integration (working range)	°C	-25 ... +35				
Cooling						
Cooling adjustable temperature (operating field)	°C	+5 ... +25				
Cooling outdoor temperature (operating field)	°C	-5 ... +46				
DHW						
DHW adjustable temperature without integration (working range)	°C	+20 ... +70				
DHW external temperature without integration (working range)	°C	-25 ... +46				
DHW adjustable temperature with enabled integration (working range)	°C	+20 ... +70				
DHW external temperature with enabled integration (working range)	°C	-25 ... +46				

5.4 PRODUCT OPERATING TEMPERATURES (THREE-PHASE)

		MAGIS M12 T V2	MAGIS M16 T V2
Central heating			
Adjustable central heating temperature (operating field)	°C	+25 ... +75	
Central heating / C.H. outdoor temperature (operating field)	°C	-25 ... +35	
Heating adjustable temperature with enabled integration (working range)	°C	+25 ... +75	
Heating external temperature with enabled integration (working range)	°C	-25 ... +35	
Cooling			
Cooling adjustable temperature (operating field)	°C	+5 ... +25	
Cooling outdoor temperature (operating field)	°C	-5 ... +46	
DHW			
DHW adjustable temperature without integration (working range)	°C	+20 ... +70	
DHW external temperature without integration (working range)	°C	-25 ... +46	
DHW adjustable temperature with enabled integration (working range)	°C	+20 ... +70	
DHW external temperature with enabled integration (working range)	°C	-25 ... +46	

5.5 NOMINAL HEATING PERFORMANCE (SINGLE-PHASE)

		MAGIS M6 V2	MAGIS M8 V2	MAGIS M10 V2	MAGIS M12 V2	MAGIS M16 V2
Outside Air Temperature 7°C/6°C - Water Temperature 30°C/35°C						
Output power	kW	6,20	8,40	10,00	12,00	15,00
Absorbed power	kW	1,27	1,68	2,13	2,50	3,41
COP		4,9	5,0	4,7	4,8	4,4
Outside Air Temperature 7°C/6°C - Water Temperature 40°C/45°C						
Output power	kW	6,40	8,20	10,00	12,00	15,00
Absorbed power	kW	1,68	2,13	2,74	3,24	4,48
COP		3,8	3,85	3,65	3,7	3,35
Outside Air Temperature 7°C/6°C - Water Temperature 47°C/55°C						
Output power	kW	6,20	7,80	9,50	12,00	15,00
Absorbed power	kW	2,00	2,44	3,11	3,87	5,26
COP		3,1	3,2	3,05	3,1	2,85
Outside Air Temperature 2°C/1°C - Water Temperature 30°C/35°C						
Output power	kW	5,60	7,10	8,20	9,10	12,80
Absorbed power	kW	1,44	1,84	2,25	2,39	4,00
COP		3,9	3,85	3,65	3,8	3,2
Outside Air Temperature 7°C/8°C - Water Temperature 30°C/35°C						
Output power	kW	5,90	7,00	8,00	10,00	12,70
Absorbed power	kW	2,00	2,33	2,81	3,57	5,08
COP		2,95	3,0	2,85	2,8	2,5

5.6 NOMINAL COOLING PERFORMANCE (SINGLE-PHASE)

		MAGIS M6 V2	MAGIS M8 V2	MAGIS M10 V2	MAGIS M12 V2	MAGIS M16 V2
Outside Air Temperature 35°C - Water Temperature 23°C/18°C						
Output power	kW	6,50	8,30	10,00	12,00	16,00
Absorbed power	kW	1,27	1,61	2,11	2,67	4,10
EER		5,1	5,15	4,75	4,5	3,9
Outside Air Temperature 35°C - Water Temperature 12°C/7°C						
Output power	kW	6,80	7,50	8,90	11,50	14,00
Absorbed power	kW	2,19	2,17	2,74	3,77	5,09
EER		3,10	3,45	3,25	3,05	2,75

5.7 NOMINAL HEATING PERFORMANCE (THREE-PHASE)

		MAGIS M12 T V2	MAGIS M16 T V2
Outside Air Temperature 7°C/6°C - Water Temperature 30°C/35°C			
Output power	kW	12,00	15,00
Absorbed power	kW	2,50	3,41
COP		4,8	4,4
Outside Air Temperature 7°C/6°C - Water Temperature 40°C/45°C			
Output power	kW	12,00	15,00
Absorbed power	kW	3,24	4,48
COP		3,7	3,35
Outside Air Temperature 7°C/6°C - Water Temperature 47°C/55°C			
Output power	kW	12,00	15,00
Absorbed power	kW	3,87	5,26
COP		3,1	2,85
Outside Air Temperature 2°C/1°C - Water Temperature 30°C/35°C			
Output power	kW	9,10	12,80
Absorbed power	kW	2,39	4,00
COP		3,8	3,2
Outside Air Temperature 7°C/8°C - Water Temperature 30°C/35°C			
Output power	kW	10,00	12,70
Absorbed power	kW	3,57	5,08
COP		2,8	2,5

5.8 NOMINAL COOLING PERFORMANCE (THREE-PHASE)

		MAGIS M12 T V2	MAGIS M16 T V2
Outside Air Temperature 35°C - Water Temperature 23°C/18°C			
Output power	kW	12,00	16,00
Absorbed power	kW	2,67	4,10
EER		4,5	3,9
Outside Air Temperature 35°C - Water Temperature 12°C/7°C			
Output power	kW	11,50	14,00
Absorbed power	kW	3,77	5,09
EER		3,05	2,75

5.9 PRODUCT FICHE MAGIS M6 V2 (IN COMPLIANCE WITH REGULATION 811/2013)

A	Supplier's name or trademark		-	Immergas
B	Supplier's model identifier		-	MAGIS M6 V2
C	For space heating	Application temperature	-	Average temperature
	For water heating	Stated load profile	-	-
D	Seasonal energy efficiency class of room heating	Average temperature	-	A++
		Low temperature	-	A+++
	Energy efficiency class of water heating		-	-
E	Nominal heat output (average climate condition)	Average temperature	kW	6
		Low temperature	kW	6
F	Annual energy consumption for room heating (average climate condition)	Average temperature	kWh	3191
		Low temperature	kWh	2700
	Annual energy consumption for water heating (average climate condition)		kWh	-
G	Seasonal energy efficiency of room heating (average climate condition)	Average temperature	%	150
		Low temperature	%	193
	Energy efficiency of water heating (average climate condition)		%	-
H	Lwa sound power level indoors		dB	-
I	Operation only during dead hours		Yes\No	No
J	Specific precautions		-	-
K	Nominal heat output (colder climate condition)	Average temperature	kW	6
		Low temperature	kW	6
	Nominal heat output (warmer climate condition)	Average temperature	kW	6
		Low temperature	kW	6
L	Annual energy consumption for room heating (colder climate condition)	Average temperature	kWh	4325
		Low temperature	kWh	3663
	Annual energy consumption for room heating (warmer climate condition)	Average temperature	kWh	1762
		Low temperature	kWh	1198
	Annual energy consumption for water heating (colder climate condition)		kWh	-
	Annual energy consumption for water heating (warmer climate condition)		kWh	-
M	Seasonal energy efficiency of room heating (colder climate condition)	Average temperature	%	132
		Low temperature	%	167
	Seasonal energy efficiency of room heating (warmer climate condition)	Average temperature	%	179
		Low temperature	%	242
N	Lwa sound power level outdoors		dB	58

5.10 TABLE 2 REGULATION 813/2013 (MAGIS M6 V2)

Model	MAGIS M6 V2						
Air/water heat pump			YES	Low temperature heat pump			NO
Water/water heat pump			NO	With Supplementary heater			NO
Brine/water heat pump			NO	Mixed central heating device with heat pump:			NO
The parameters are declared for average temperature application, except for low temperature heat pumps. The parameters for low temperature heat pumps are declared for low temperature application							
The parameters are declared for average climatic conditions							
Element	**Symbol**	**Value**	**Unit**	**Element**	**Symbol**	**Value**	**Unit**
Rated heat output (*)	*Prated*	6	kW	Room central heating seasonal energy efficiency	η_s	150	%
Central heating capacity declared with a partial load and indoor temperature equivalent to 20°C and outdoor temperature T_j				Performance coefficient declared or primary energy index for partial load it, with indoor temperature equivalent to 20°C and outdoor temperature T_j			
T_j = – 7 °C	Pdh	5,36	kW	T_j = – 7 °C	COPd	2,41	-
T_j = + 2 °C	Pdh	3,12	kW	T_j = + 2 °C	COPd	3,73	-
T_j = + 7 °C	Pdh	2,62	kW	T_j = + 7 °C	COPd	5,21	-
T_j = + 12 °C	Pdh	3,03	kW	T_j = + 12 °C	COPd	6,78	-
T_j = bivalent temperature	Pdh	5,36	kW	T_j = bivalent temperature	COPd	2,41	-
T_j = operating limit temperature	Pdh	5,10	kW	T_j = operating limit temperature	COPd	2,15	-
for air/water heat pumps: T_j = – 15 °C (se TOL < – 20 °C)	Pdh	-	kW	for air/water heat pumps: T_j = – 15 °C (se TOL < – 20 °C)	COPd	-	-
Bivalent temperature	T_{biv}	-7	°C	For air/water heat pumps: Operating limit temperature	TOL	-10	°C
Central heating capacity cycle intervals	Pcych	-	kW	Cycle intervals efficiency	COP-cych	-	-
Degradation coefficient (**)	Cdh	0,9	-	Water heating temperature operating limit	WTOL	75	°C
Different mode of energy consumption from the active mode				Additional heater			
OFF mode	P_{OFF}	0,009	kW	Rated heat output (*)	Psup	0,8	kW
Thermostat mode off	P_{TO}	0,014	kW	Type of energy supply voltage	Electric		
Standby mode	P_{SB}	0,009	kW				
Guard heating mode	P_{CK}	0,000	kW				
Other items							
Capacity control	variable			For air/water heat pumps: air flow rate to outside	-	2770	m^3\h
Indoor/outdoor sound level	L_{WA}	- / 58	dB	For water\water or brine\water heat pumps: nominal flow of brine or water, outdoor heat exchanger	-	-	m^3\h
Emissions of nitrogen oxide	NO_X	-	mg\kWh				
For mixed central heating appliances with a heat pump							
Stated load profile	-			Water central heating energy efficiency	η_{wh}	-	%
Daily electrical power consumption	Q_{elec}	kWh	kWh	Daily fuel consumption	Q_{fuel}	-	kWh
Annual energy consumption	AEC	-	kWh	Annual fuel consumption	AFC	-	GJ
Contact information: Immergas S.p.A. via Cisa Ligure n.95							

(*) For heat pump appliances for space heating and heat pump mixed heating appliances, the nominal heat output Pnominal is equal to the design load for central heating Pdesignh and the nominal heat output of an additional heater Psup is equal to the additional central heating capacity sup(Tj).
(**) If Cdh is not determined by a measurement, the degradation coefficient is Cdh = 0,9.

5.11 PRODUCT FICHE MAGIS M8 V2 (IN COMPLIANCE WITH REGULATION 811/2013)

A	Supplier's name or trademark		-	Immergas
B	Supplier's model identifier		-	MAGIS M8 V2
C	For space heating	Application temperature	-	Average temperature
	For water heating	Stated load profile	-	-
D	Seasonal energy efficiency class of room heating	Average temperature	-	A++
		Low temperature	-	A+++
	Energy efficiency class of water heating		-	-
E	Nominal heat output (average climate condition)	Average temperature	kW	7
		Low temperature	kW	8
F	Annual energy consumption for room heating (average climate condition)	Average temperature	kWh	3684
		Low temperature	kWh	3251
	Annual energy consumption for water heating (average climate condition)		kWh	-
G	Seasonal energy efficiency of room heating (average climate condition)	Average temperature	%	150
		Low temperature	%	200
	Energy efficiency of water heating (average climate condition)		%	-
H	Lwa sound power level indoors		dB	-
I	Operation only during dead hours		Yes\No	No
J	Specific precautions		-	-
K	Nominal heat output (colder climate condition)	Average temperature	kW	7
		Low temperature	kW	7
	Nominal heat output (warmer climate condition)	Average temperature	kW	8
		Low temperature	kW	8
L	Annual energy consumption for room heating (colder climate condition)	Average temperature	kWh	4995
		Low temperature	kWh	3772
	Annual energy consumption for room heating (warmer climate condition)	Average temperature	kWh	2368
		Low temperature	kWh	1669
	Annual energy consumption for water heating (colder climate condition)		kWh	-
	Annual energy consumption for water heating (warmer climate condition)		kWh	-
M	Seasonal energy efficiency of room heating (colder climate condition)	Average temperature	%	135
		Low temperature	%	175
	Seasonal energy efficiency of room heating (warmer climate condition)	Average temperature	%	184
		Low temperature	%	259
N	Lwa sound power level outdoors		dB	60

5.12 TABLE 2 REGULATION 813/2013 (MAGIS M8 V2)

Model	MAGIS M8 V2						
Air/water heat pump			YES	Low temperature heat pump			NO
Water/water heat pump			NO	With Supplementary heater			NO
Brine/water heat pump			NO	Mixed central heating device with heat pump:			NO
The parameters are declared for average temperature application, except for low temperature heat pumps. The parameters for low temperature heat pumps are declared for low temperature application							
The parameters are declared for average climatic conditions							
Element	**Symbol**	**Value**	**Unit**	**Element**	**Symbol**	**Value**	**Unit**
Rated heat output (*)	*Prated*	7	kW	Room central heating seasonal energy efficiency	η_s	150	%
Central heating capacity declared with a partial load and indoor temperature equivalent to 20°C and outdoor temperature T_j				Performance coefficient declared or primary energy index for partial load it, with indoor temperature equivalent to 20°C and outdoor temperature T_j			
T_j = – 7 °C	Pdh	5,97	kW	T_j = – 7 °C	COPd	2,37	-
T_j = + 2 °C	Pdh	3,71	kW	T_j = + 2 °C	COPd	3,85	-
T_j = + 7 °C	Pdh	3,62	kW	T_j = + 7 °C	COPd	5,12	-
T_j = + 12 °C	Pdh	4,23	kW	T_j = + 12 °C	COPd	6,61	-
T_j = bivalent temperature	Pdh	5,97	kW	T_j = bivalent temperature	COPd	2,37	-
T_j = operating limit temperature	Pdh	6,46	kW	T_j = operating limit temperature	COPd	2,08	-
for air/water heat pumps: T_j = – 15 °C (se TOL < – 20 °C)	Pdh	-	kW	for air/water heat pumps: T_j = – 15 °C (se TOL < – 20 °C)	COPd	-	-
Bivalent temperature	T_{biv}	-7	°C	For air/water heat pumps: Operating limit temperature	TOL	-10	°C
Central heating capacity cycle intervals	Pcych	-	kW	Cycle intervals efficiency	COP-cych	-	-
Degradation coefficient (**)	Cdh	0,9	-	Water heating temperature operating limit	WTOL	75	°C
Different mode of energy consumption from the active mode				Additional heater			
OFF mode	P_{OFF}	0,009	kW	Rated heat output (*)	Psup	0,3	kW
Thermostat mode off	P_{TO}	0,014	kW	Type of energy supply voltage	Electric		
Standby mode	P_{SB}	0,009	kW				
Guard heating mode	P_{CK}	0,000	kW				
Other items							
Capacity control	variable			For air/water heat pumps: air flow rate to outside	-	4030	m^3\h
Indoor/outdoor sound level	L_{WA}	- / 60	dB	For water\water or brine\water heat pumps: nominal flow of brine or water, outdoor heat exchanger	-	-	m^3\h
Emissions of nitrogen oxide	NO_X	-	mg\kWh				
For mixed central heating appliances with a heat pump							
Stated load profile	-			Water central heating energy efficiency	η_{wh}	-	%
Daily electrical power consumption	Q_{elec}	kWh	kWh	Daily fuel consumption	Q_{fuel}	-	kWh
Annual energy consumption	AEC	-	kWh	Annual fuel consumption	AFC	-	GJ
Contact information: Immergas S.p.A. via Cisa Ligure n.95							

(*) For heat pump appliances for space heating and heat pump mixed heating appliances, the nominal heat output Pnominal is equal to the design load for central heating Pdesignh and the nominal heat output of an additional heater Psup is equal to the additional central heating capacity sup(Tj).
(**) If Cdh is not determined by a measurement, the degradation coefficient is Cdh = 0,9.

5.13 PRODUCT FICHE MAGIS M10 V2 (IN COMPLIANCE WITH REGULATION 811/2013)

A	Supplier's name or trademark		-	Immergas
B	Supplier's model identifier		-	MAGIS M10 V2
C	For space heating	Application temperature	-	Average temperature
	For water heating	Stated load profile	-	-
D	Seasonal energy efficiency class of room heating	Average temperature	-	A++
		Low temperature	-	A+++
	Energy efficiency class of water heating		-	-
E	Nominal heat output (average climate condition)	Average temperature	kW	8
		Low temperature	kW	9
F	Annual energy consumption for room heating (average climate condition)	Average temperature	kWh	4226
		Low temperature	kWh	3814
	Annual energy consumption for water heating (average climate condition)		kWh	-
G	Seasonal energy efficiency of room heating (average climate condition)	Average temperature	%	150
		Low temperature	%	196
	Energy efficiency of water heating (average climate condition)		%	-
H	Lwa sound power level indoors		dB	-
I	Operation only during dead hours		Yes\No	No
J	Specific precautions		-	-
K	Nominal heat output (colder climate condition)	Average temperature	kW	8
		Low temperature	kW	8
	Nominal heat output (warmer climate condition)	Average temperature	kW	9
		Low temperature	kW	9
L	Annual energy consumption for room heating (colder climate condition)	Average temperature	kWh	5654
		Low temperature	kWh	4308
	Annual energy consumption for room heating (warmer climate condition)	Average temperature	kWh	2456
		Low temperature	kWh	1679
	Annual energy consumption for water heating (colder climate condition)		kWh	-
	Annual energy consumption for water heating (warmer climate condition)		kWh	-
M	Seasonal energy efficiency of room heating (colder climate condition)	Average temperature	%	137
		Low temperature	%	178
	Seasonal energy efficiency of room heating (warmer climate condition)	Average temperature	%	189
		Low temperature	%	271
N	Lwa sound power level outdoors		dB	61

5.14 TABLE 2 REGULATION 813/2013 (MAGIS M10 V2)

Model	MAGIS M10 V2						
Air/water heat pump			YES	Low temperature heat pump			NO
Water/water heat pump			NO	With Supplementary heater			NO
Brine/water heat pump			NO	Mixed central heating device with heat pump:			NO
The parameters are declared for average temperature application, except for low temperature heat pumps. The parameters for low temperature heat pumps are declared for low temperature application							
The parameters are declared for average climatic conditions							
Element	**Symbol**	**Value**	**Unit**	**Element**	**Symbol**	**Value**	**Unit**
Rated heat output (*)	*Prated*	8	kW	Room central heating seasonal energy efficiency	η_s	150	%
Central heating capacity declared with a partial load and indoor temperature equivalent to 20°C and outdoor temperature T_j				Performance coefficient declared or primary energy index for partial load it, with indoor temperature equivalent to 20°C and outdoor temperature T_j			
T_j = – 7 °C	Pdh	6,88	kW	T_j = – 7 °C	COPd	2,31	-
T_j = + 2 °C	Pdh	4,23	kW	T_j = + 2 °C	COPd	3,80	-
T_j = + 7 °C	Pdh	3,62	kW	T_j = + 7 °C	COPd	5,21	-
T_j = + 12 °C	Pdh	4,23	kW	T_j = + 12 °C	COPd	6,65	-
T_j = bivalent temperature	Pdh	6,88	kW	T_j = bivalent temperature	COPd	2,31	-
T_j = operating limit temperature	Pdh	7,42	kW	T_j = operating limit temperature	COPd	1,99	-
for air/water heat pumps: T_j = – 15 °C (se TOL < – 20 °C)	Pdh	-	kW	for air/water heat pumps: T_j = – 15 °C (se TOL < – 20 °C)	COPd	-	-
Bivalent temperature	T_{biv}	-7	°C	For air/water heat pumps: Operating limit temperature	TOL	-10	°C
Central heating capacity cycle intervals	Pcych	-	kW	Cycle intervals efficiency	COP-cych	-	-
Degradation coefficient (**)	Cdh	0,9	-	Water heating temperature operating limit	WTOL	75	°C
Different mode of energy consumption from the active mode				Additional heater			
OFF mode	P_{OFF}	0,009	kW	Rated heat output (*)	Psup	0,4	kW
Thermostat mode off	P_{TO}	0,014	kW	Type of energy supply voltage	Electric		
Standby mode	P_{SB}	0,009	kW				
Guard heating mode	P_{CK}	0,000	kW				
Other items							
Capacity control	variable			For air/water heat pumps: air flow rate to outside	-	4030	m^3\h
Indoor/outdoor sound level	L_{WA}	- / 61	dB	For water\water or brine\water heat pumps: nominal flow of brine or water, outdoor heat exchanger	-	-	m^3\h
Emissions of nitrogen oxide	NO_X	-	mg\ kWh				
For mixed central heating appliances with a heat pump							
Stated load profile	-			Water central heating energy efficiency	η_{wh}	-	%
Daily electrical power consumption	Q_{elec}	kWh	kWh	Daily fuel consumption	Q_{fuel}	-	kWh
Annual energy consumption	AEC	-	kWh	Annual fuel consumption	AFC	-	GJ
Contact information: Immergas S.p.A. via Cisa Ligure n.95							

(*) For heat pump appliances for space heating and heat pump mixed heating appliances, the nominal heat output Pnominal is equal to the design load for central heating Pdesignh and the nominal heat output of an additional heater Psup is equal to the additional central heating capacity sup(Tj).
(**) If Cdh is not determined by a measurement, the degradation coefficient is Cdh = 0,9.

5.15 PRODUCT FICHE MAGIS M12 V2 (IN COMPLIANCE WITH REGULATION 811/2013)

A	Supplier's name or trademark		-	Immergas
B	Supplier's model identifier		-	MAGIS M12 V2
C	For space heating	Application temperature	-	Average temperature
	For water heating	Stated load profile	-	-
D	Seasonal energy efficiency class of room heating	Average temperature	-	A++
		Low temperature	-	A+++
	Energy efficiency class of water heating		-	-
E	Nominal heat output (average climate condition)	Average temperature	kW	12
		Low temperature	kW	12
F	Annual energy consumption for room heating (average climate condition)	Average temperature	kWh	6843
		Low temperature	kWh	5352
	Annual energy consumption for water heating (average climate condition)		kWh	-
G	Seasonal energy efficiency of room heating (average climate condition)	Average temperature	%	142
		Low temperature	%	184
	Energy efficiency of water heating (average climate condition)		%	-
H	Lwa sound power level indoors		dB	-
I	Operation only during dead hours		Yes\No	No
J	Specific precautions		-	-
K	Nominal heat output (colder climate condition)	Average temperature	kW	11
		Low temperature	kW	12
	Nominal heat output (warmer climate condition)	Average temperature	kW	12
		Low temperature	kW	12
L	Annual energy consumption for room heating (colder climate condition)	Average temperature	kWh	8197
		Low temperature	kWh	6869
	Annual energy consumption for room heating (warmer climate condition)	Average temperature	kWh	3724
		Low temperature	kWh	2651
	Annual energy consumption for water heating (colder climate condition)		kWh	-
	Annual energy consumption for water heating (warmer climate condition)		kWh	-
M	Seasonal energy efficiency of room heating (colder climate condition)	Average temperature	%	127
		Low temperature	%	162
	Seasonal energy efficiency of room heating (warmer climate condition)	Average temperature	%	175
		Low temperature	%	233
N	Lwa sound power level outdoors		dB	65

5.16 TABLE 2 REGULATION 813/2013 (MAGIS M12 V2)

Model	MAGIS M12 V2						
Air/water heat pump			YES	Low temperature heat pump			NO
Water/water heat pump			NO	With Supplementary heater			NO
Brine/water heat pump			NO	Mixed central heating device with heat pump:			NO
The parameters are declared for average temperature application, except for low temperature heat pumps. The parameters for low temperature heat pumps are declared for low temperature application							
The parameters are declared for average climatic conditions							
Element	**Symbol**	**Value**	**Unit**	**Element**	**Symbol**	**Value**	**Unit**
Rated heat output (*)	*Prated*	12	kW	Room central heating seasonal energy efficiency	η_s	142	%
Central heating capacity declared with a partial load and indoor temperature equivalent to 20°C and outdoor temperature T_j				Performance coefficient declared or primary energy index for partial load it, with indoor temperature equivalent to 20°C and outdoor temperature T_j			
T_j = – 7 °C	Pdh	10,58	kW	T_j = – 7 °C	COPd	2,23	-
T_j = + 2 °C	Pdh	6,59	kW	T_j = + 2 °C	COPd	3,52	-
T_j = + 7 °C	Pdh	4,78	kW	T_j = + 7 °C	COPd	4,99	-
T_j = + 12 °C	Pdh	5,59	kW	T_j = + 12 °C	COPd	6,41	-
T_j = bivalent temperature	Pdh	10,58	kW	T_j = bivalent temperature	COPd	2,23	-
T_j = operating limit temperature	Pdh	10,15	kW	T_j = operating limit temperature	COPd	2,05	-
for air/water heat pumps: T_j = – 15 °C (se TOL < – 20 °C)	Pdh	-	kW	for air/water heat pumps: T_j = – 15 °C (se TOL < – 20 °C)	COPd	-	-
Bivalent temperature	T_{biv}	-7	°C	For air/water heat pumps: Operating limit temperature	TOL	-10	°C
Central heating capacity cycle intervals	Pcych	-	kW	Cycle intervals efficiency	COP-cych	-	-
Degradation coefficient (**)	Cdh	0,9	-	Water heating temperature operating limit	WTOL	75	°C
Different mode of energy consumption from the active mode				Additional heater			
OFF mode	P_{OFF}	0,009	kW	Rated heat output (*)	Psup	2,0	kW
Thermostat mode off	P_{TO}	0,014	kW	Type of energy supply voltage	Electric		
Standby mode	P_{SB}	0,009	kW				
Guard heating mode	P_{CK}	0,000	kW				
Other items							
Capacity control	variable			For air/water heat pumps: air flow rate to outside	-	4450	m^3\h
Indoor/outdoor sound level	L_{WA}	- / 65	dB	For water\water or brine\water heat pumps: nominal flow of brine or water, outdoor heat exchanger	-	-	m^3\h
Emissions of nitrogen oxide	NO_X	-	mg\kWh				
For mixed central heating appliances with a heat pump							
Stated load profile	-			Water central heating energy efficiency	η_{wh}	-	%
Daily electrical power consumption	Q_{elec}	kWh	kWh	Daily fuel consumption	Q_{fuel}	-	kWh
Annual energy consumption	AEC	-	kWh	Annual fuel consumption	AFC	-	GJ
Contact information: Immergas S.p.A. via Cisa Ligure n.95							

(*) For heat pump appliances for space heating and heat pump mixed heating appliances, the nominal heat output Pnominal is equal to the design load for central heating Pdesignh and the nominal heat output of an additional heater Psup is equal to the additional central heating capacity sup(Tj).
(**) If Cdh is not determined by a measurement, the degradation coefficient is Cdh = 0,9.

5.17 PRODUCT FICHE MAGIS M12 T V2 (IN COMPLIANCE WITH REGULATION 811/2013)

A	Supplier's name or trademark		-	Immergas
B	Supplier's model identifier		-	MAGIS M12 T V2
C	For space heating	Application temperature	-	Average temperature
	For water heating	Stated load profile	-	-
D	Seasonal energy efficiency class of room heating	Average temperature	-	A++
		Low temperature	-	A+++
	Energy efficiency class of water heating		-	-
E	Nominal heat output (average climate condition)	Average temperature	kW	12
		Low temperature	kW	12
F	Annual energy consumption for room heating (average climate condition)	Average temperature	kWh	6843
		Low temperature	kWh	5352
	Annual energy consumption for water heating (average climate condition)		kWh	-
G	Seasonal energy efficiency of room heating (average climate condition)	Average temperature	%	142
		Low temperature	%	184
	Energy efficiency of water heating (average climate condition)		%	-
H	Lwa sound power level indoors		dB	-
I	Operation only during dead hours		Yes\No	No
J	Specific precautions		-	-
K	Nominal heat output (colder climate condition)	Average temperature	kW	11
		Low temperature	kW	12
	Nominal heat output (warmer climate condition)	Average temperature	kW	12
		Low temperature	kW	12
L	Annual energy consumption for room heating (colder climate condition)	Average temperature	kWh	8197
		Low temperature	kWh	6869
	Annual energy consumption for room heating (warmer climate condition)	Average temperature	kWh	3724
		Low temperature	kWh	2651
	Annual energy consumption for water heating (colder climate condition)		kWh	-
	Annual energy consumption for water heating (warmer climate condition)		kWh	-
M	Seasonal energy efficiency of room heating (colder climate condition)	Average temperature	%	127
		Low temperature	%	162
	Seasonal energy efficiency of room heating (warmer climate condition)	Average temperature	%	175
		Low temperature	%	233
N	Lwa sound power level outdoors		dB	65

5.18 TABLE 2 REGULATION 813/2013 (MAGIS M12 T V2)

Model	MAGIS M12 T V2						
Air/water heat pump			YES	Low temperature heat pump			NO
Water/water heat pump			NO	With Supplementary heater			NO
Brine/water heat pump			NO	Mixed central heating device with heat pump:			NO
The parameters are declared for average temperature application, except for low temperature heat pumps. The parameters for low temperature heat pumps are declared for low temperature application							
The parameters are declared for average climatic conditions							
Element	**Symbol**	**Value**	**Unit**	**Element**	**Symbol**	**Value**	**Unit**
Rated heat output (*)	*Prated*	12	kW	Room central heating seasonal energy efficiency	η_s	142	%
Central heating capacity declared with a partial load and indoor temperature equivalent to 20°C and outdoor temperature T_j				Performance coefficient declared or primary energy index for partial load it, with indoor temperature equivalent to 20°C and outdoor temperature T_j			
T_j = – 7 °C	Pdh	10,58	kW	T_j = – 7 °C	COPd	2,23	-
T_j = + 2 °C	Pdh	6,59	kW	T_j = + 2 °C	COPd	3,52	-
T_j = + 7 °C	Pdh	4,78	kW	T_j = + 7 °C	COPd	4,99	-
T_j = + 12 °C	Pdh	5,59	kW	T_j = + 12 °C	COPd	6,41	-
T_j = bivalent temperature	Pdh	10,58	kW	T_j = bivalent temperature	COPd	2,23	-
T_j = operating limit temperature	Pdh	10,15	kW	T_j = operating limit temperature	COPd	2,05	-
for air/water heat pumps: T_j = – 15 °C (se TOL < – 20 °C)	Pdh	-	kW	for air/water heat pumps: T_j = – 15 °C (se TOL < – 20 °C)	COPd	-	-
Bivalent temperature	T_{biv}	-7	°C	For air/water heat pumps: Operating limit temperature	TOL	-10	°C
Central heating capacity cycle intervals	Pcych	-	kW	Cycle intervals efficiency	COP-cych	-	-
Degradation coefficient (**)	Cdh	0,9	-	Water heating temperature operating limit	WTOL	75	°C
Different mode of energy consumption from the active mode				Additional heater			
OFF mode	P_{OFF}	0,009	kW	Rated heat output (*)	Psup	2,0	kW
Thermostat mode off	P_{TO}	0,014	kW	Type of energy supply voltage	Electric		
Standby mode	P_{SB}	0,009	kW				
Guard heating mode	P_{CK}	0,000	kW				
Other items							
Capacity control	variable			For air/water heat pumps: air flow rate to outside	-	4450	m^3\h
Indoor/outdoor sound level	L_{WA}	- / 65	dB	For water\water or brine\water heat pumps: nominal flow of brine or water, outdoor heat exchanger	-	-	m^3\h
Emissions of nitrogen oxide	NO_X	-	mg\kWh				
For mixed central heating appliances with a heat pump							
Stated load profile	-			Water central heating energy efficiency	η_{wh}	-	%
Daily electrical power consumption	Q_{elec}	kWh	kWh	Daily fuel consumption	Q_{fuel}	-	kWh
Annual energy consumption	AEC	-	kWh	Annual fuel consumption	AFC	-	GJ
Contact information: Immergas S.p.A. via Cisa Ligure n.95							

(*) For heat pump appliances for space heating and heat pump mixed heating appliances, the nominal heat output Pnominal is equal to the design load for central heating Pdesignh and the nominal heat output of an additional heater Psup is equal to the additional central heating capacity sup(Tj).
(**) If Cdh is not determined by a measurement, the degradation coefficient is Cdh = 0,9.

5.19 PRODUCT FICHE MAGIS M16 V2 (IN COMPLIANCE WITH REGULATION 811/2013)

A	Supplier's name or trademark		-	Immergas
B	Supplier's model identifier		-	MAGIS M16 V2
C	For space heating	Application temperature	-	Average temperature
	For water heating	Stated load profile	-	-
D	Seasonal energy efficiency class of room heating	Average temperature	-	A++
		Low temperature	-	A+++
	Energy efficiency class of water heating		-	-
E	Nominal heat output (average climate condition)	Average temperature	kW	14
		Low temperature	kW	15
F	Annual energy consumption for room heating (average climate condition)	Average temperature	kWh	8290
		Low temperature	kWh	6617
	Annual energy consumption for water heating (average climate condition)		kWh	-
G	Seasonal energy efficiency of room heating (average climate condition)	Average temperature	%	141
		Low temperature	%	181
	Energy efficiency of water heating (average climate condition)		%	-
H	Lwa sound power level indoors		dB	-
I	Operation only during dead hours		Yes\No	No
J	Specific precautions		-	-
K	Nominal heat output (colder climate condition)	Average temperature	kW	14
		Low temperature	kW	15
	Nominal heat output (warmer climate condition)	Average temperature	kW	15
		Low temperature	kW	14
L	Annual energy consumption for room heating (colder climate condition)	Average temperature	kWh	10408
		Low temperature	kWh	8813
	Annual energy consumption for room heating (warmer climate condition)	Average temperature	kWh	4306
		Low temperature	kWh	3159
	Annual energy consumption for water heating (colder climate condition)		kWh	-
	Annual energy consumption for water heating (warmer climate condition)		kWh	-
M	Seasonal energy efficiency of room heating (colder climate condition)	Average temperature	%	128
		Low temperature	%	160
	Seasonal energy efficiency of room heating (warmer climate condition)	Average temperature	%	182
		Low temperature	%	239
N	Lwa sound power level outdoors		dB	69

5.20 TABLE 2 REGULATION 813/2013 (MAGIS M16 V2)

Model	MAGIS M16 V2						
Air/water heat pump			YES	Low temperature heat pump			NO
Water/water heat pump			NO	With Supplementary heater			NO
Brine/water heat pump			NO	Mixed central heating device with heat pump:			NO
The parameters are declared for average temperature application, except for low temperature heat pumps. The parameters for low temperature heat pumps are declared for low temperature application							
The parameters are declared for average climatic conditions							
Element	**Symbol**	**Value**	**Unit**	**Element**	**Symbol**	**Value**	**Unit**
Rated heat output (*)	*Prated*	14	kW	Room central heating seasonal energy efficiency	η_s	141	%
Central heating capacity declared with a partial load and indoor temperature equivalent to 20°C and outdoor temperature T_j				Performance coefficient declared or primary energy index for partial load it, with indoor temperature equivalent to 20°C and outdoor temperature T_j			
T_j = – 7 °C	Pdh	12,57	kW	T_j = – 7 °C	COPd	2,01	-
T_j = + 2 °C	Pdh	8,00	kW	T_j = + 2 °C	COPd	3,55	-
T_j = + 7 °C	Pdh	4,67	kW	T_j = + 7 °C	COPd	5,02	-
T_j = + 12 °C	Pdh	5,34	kW	T_j = + 12 °C	COPd	6,28	-
T_j = bivalent temperature	Pdh	12,57	kW	T_j = bivalent temperature	COPd	2,01	-
T_j = operating limit temperature	Pdh	11,77	kW	T_j = operating limit temperature	COPd	1,90	-
for air/water heat pumps: T_j = – 15 °C (se TOL < – 20 °C)	Pdh	-	kW	for air/water heat pumps: T_j = – 15 °C (se TOL < – 20 °C)	COPd	-	-
Bivalent temperature	T_{biv}	-7	°C	For air/water heat pumps: Operating limit temperature	TOL	-10	°C
Central heating capacity cycle intervals	Pcych	-	kW	Cycle intervals efficiency	COP-cych	-	-
Degradation coefficient (**)	Cdh	0,9	-	Water heating temperature operating limit	WTOL	75	°C
Different mode of energy consumption from the active mode				Additional heater			
OFF mode	P_{OFF}	0,009	kW	Rated heat output (*)	Psup	2,6	kW
Thermostat mode off	P_{TO}	0,014	kW	Type of energy supply voltage	Electric		
Standby mode	P_{SB}	0,009	kW				
Guard heating mode	P_{CK}	0,000	kW				
Other items							
Capacity control	variable			For air/water heat pumps: air flow rate to outside	-	5040	m^3\h
Indoor/outdoor sound level	L_{WA}	- / 69	dB	For water\water or brine\water heat pumps: nominal flow of brine or water, outdoor heat exchanger	-	-	m^3\h
Emissions of nitrogen oxide	NO_X	-	mg\kWh				
For mixed central heating appliances with a heat pump							
Stated load profile	-			Water central heating energy efficiency	η_{wh}	-	%
Daily electrical power consumption	Q_{elec}	kWh	kWh	Daily fuel consumption	Q_{fuel}	-	kWh
Annual energy consumption	AEC	-	kWh	Annual fuel consumption	AFC	-	GJ
Contact information: Immergas S.p.A. via Cisa Ligure n.95							

(*) For heat pump appliances for space heating and heat pump mixed heating appliances, the nominal heat output Pnominal is equal to the design load for central heating Pdesignh and the nominal heat output of an additional heater Psup is equal to the additional central heating capacity sup(Tj).
(**) If Cdh is not determined by a measurement, the degradation coefficient is Cdh = 0,9.

5.21 PRODUCT DATA SHEET MAGIS M16 T V2 (IN ACCORDANCE WITH REGULATION 811/2013)

A	Supplier's name or trademark		-	Immergas
B	Supplier's model identifier		-	MAGIS M16 T V2
C	For space heating	Application temperature	-	Average temperature
	For water heating	Stated load profile	-	-
D	Seasonal energy efficiency class of room heating	Average temperature	-	A++
		Low temperature	-	A+++
	Energy efficiency class of water heating		-	-
E	Nominal heat output (average climate condition)	Average temperature	kW	14
		Low temperature	kW	15
F	Annual energy consumption for room heating (average climate condition)	Average temperature	kWh	8290
		Low temperature	kWh	6617
	Annual energy consumption for water heating (average climate condition)		kWh	-
G	Seasonal energy efficiency of room heating (average climate condition)	Average temperature	%	141
		Low temperature	%	181
	Energy efficiency of water heating (average climate condition)		%	-
H	Lwa sound power level indoors		dB	-
I	Operation only during dead hours		Yes\No	No
J	Specific precautions		-	-
K	Nominal heat output (colder climate condition)	Average temperature	kW	14
		Low temperature	kW	15
	Nominal heat output (warmer climate condition)	Average temperature	kW	15
		Low temperature	kW	14
L	Annual energy consumption for room heating (colder climate condition)	Average temperature	kWh	10408
		Low temperature	kWh	8813
	Annual energy consumption for room heating (warmer climate condition)	Average temperature	kWh	4306
		Low temperature	kWh	3159
	Annual energy consumption for water heating (colder climate condition)		kWh	-
	Annual energy consumption for water heating (warmer climate condition)		kWh	-
M	Seasonal energy efficiency of room heating (colder climate condition)	Average temperature	%	128
		Low temperature	%	160
	Seasonal energy efficiency of room heating (warmer climate condition)	Average temperature	%	182
		Low temperature	%	239
N	Lwa sound power level outdoors		dB	69

5.22 TABLE 2 OF REGULATION 813/2013 (MAGIS M16 T V2)

Model	MAGIS M16 T V2						
Air/water heat pump		YES		Low temperature heat pump		NO	
Water/water heat pump		NO		With Supplementary heater		NO	
Brine/water heat pump		NO		Mixed central heating device with heat pump:		NO	
The parameters are declared for average temperature application, except for low temperature heat pumps. The parameters for low temperature heat pumps are declared for low temperature application							
The parameters are declared for average climatic conditions							
Element	**Symbol**	**Value**	**Unit**	**Element**	**Symbol**	**Value**	**Unit**
Rated heat output (*)	*Prated*	14	kW	Room central heating seasonal energy efficiency	η_s	141	%
Central heating capacity declared with a partial load and indoor temperature equivalent to 20°C and outdoor temperature T_j				Performance coefficient declared or primary energy index for partial load it, with indoor temperature equivalent to 20°C and outdoor temperature T_j			
T_j = – 7 °C	Pdh	12,57	kW	T_j = – 7 °C	COPd	2,01	-
T_j = + 2 °C	Pdh	8,00	kW	T_j = + 2 °C	COPd	3,55	-
T_j = + 7 °C	Pdh	4,67	kW	T_j = + 7 °C	COPd	5,02	-
T_j = + 12 °C	Pdh	5,34	kW	T_j = + 12 °C	COPd	6,28	-
T_j = bivalent temperature	Pdh	12,57	kW	T_j = bivalent temperature	COPd	2,01	-
T_j = operating limit temperature	Pdh	11,77	kW	T_j = operating limit temperature	COPd	1,90	-
for air/water heat pumps: T_j = – 15 °C (se TOL < – 20 °C)	Pdh	-	kW	for air/water heat pumps: T_j = – 15 °C (se TOL < – 20 °C)	COPd	-	-
Bivalent temperature	T_{biv}	-7	°C	For air/water heat pumps: Operating limit temperature	TOL	-10	°C
Central heating capacity cycle intervals	Pcych	-	kW	Cycle intervals efficiency	COP-cych	-	-
Degradation coefficient (**)	Cdh	0,9	-	Water heating temperature operating limit	WTOL	75	°C
Different mode of energy consumption from the active mode				Additional heater			
OFF mode	P_{OFF}	0,009	kW	Rated heat output (*)	Psup	2,6	kW
Thermostat mode off	P_{TO}	0,014	kW	Type of energy supply voltage	Electric		
Standby mode	P_{SB}	0,009	kW				
Guard heating mode	P_{CK}	0,000	kW				
Other items							
Capacity control	variable			For air/water heat pumps: air flow rate to outside	-	5040	m^3\h
Indoor/outdoor sound level	L_{WA}	- / 69	dB	For water\water or brine\water heat pumps: nominal flow of brine or water, outdoor heat exchanger	-	-	m^3\h
Emissions of nitrogen oxide	NO_X	-	mg\kWh				
For mixed central heating appliances with a heat pump							
Stated load profile	-			Water central heating energy efficiency	η_{wh}	-	%
Daily electrical power consumption	Q_{elec}	kWh	kWh	Daily fuel consumption	Q_{fuel}	-	kWh
Annual energy consumption	AEC	-	kWh	Annual fuel consumption	AFC	-	GJ
Contact information: Immergas S.p.A. via Cisa Ligure n.95							

(*) For heat pump appliances for space heating and heat pump mixed heating appliances, the nominal heat output Pnominal is equal to the design load for central heating Pdesignh and the nominal heat output of an additional heater Psup is equal to the additional central heating capacity sup(Tj).
(**) If Cdh is not determined by a measurement, the degradation coefficient is Cdh = 0,9.

5.23 PARAMETERS FOR FILLING IN THE PACKAGE FICHE

If you wish to install an assembly, starting from this appliance, use the assembly charts in (Fig. 191).
For correct compilation, enter in the appropriate spaces (as shown in the facsimile overview sheet Fig. 190) the values given in the tables in the paragraph "Parameters to fill in the average temperature package fiche (47/55)".
The remaining values must be obtained from the technical data sheets of the products used to make up the assembly (e.g. solar devices, integration heat pumps, temperature controllers).
Use board (Fig. 191) for "assemblies" related to the central heating mode (e.g.: heat pump + temperature controller).

Since the product is standard supplied with a temperature controller, the package fiche must always be completed.

Facsimile for filling in the package fiche for room central heating systems.

Room central heating seasonal energy efficiency of the heat pump ‘I’ %

Temperature control
From temperature control board
Class I = 1 %, Class II = 2 %,
Class III = 1.5 %, Class IV = 2 %,
Class V = 3 %, Class VI = 4 %,
Class VII = 3.5 %, Class VIII = 5 %
+ %

Supplementary boiler
From boiler board
Seasonal central heating energy efficiency of the room (%)
(- ‘I’) x “II” = - %

Solar contribution
From the board of the solar device
Dimensions of the manifold (in m²)
Volume of the tank (in m³)
Efficiency of the manifold (in %)
Classification of the tank
A* = 0.95, A = 0.91,
B = 0.86, C = 0.83,
D-G = 0.81
(‘III’ x + ‘IV’ x) x 0.45 x (/ 100) x = + %

Room central heating seasonal energy efficiency of the assemble in average climate conditions %

Room central heating seasonal energy efficiency class of the assemble in average climate conditions

G	F	E	D	C	B	A	A⁺	A⁺⁺	A⁺⁺⁺
< 30 %	≥ 30 %	≥ 34 %	≥ 36 %	≥ 75 %	≥ 82 %	≥ 90 %	≥ 98 %	≥ 125 %	≥ 150 %

Room central heating seasonal energy efficiency in colder and hotter climate conditions

Colder: - ‘V’ = % Hotter: + ‘VI’ = %

The energy efficiency of the set of products indicated in this sheet may not reflect the actual energy efficiency after installation since such efficiency is affected by additional factors, such as the heat loss in the distribution system and the size of the products compared to the size and features of the building.

190

Parameters to fill in the average temperature package fiche (47/55)

Magis M6 V2

Parameter	Colder zones	Average zones	Hotter zones
	■	■	■
"I"	132	150	179
"II"	*	*	*
"III"	4,53	4,53	4,45
"IV"	1,77	1,77	1,74

Magis M8 V2

Parameter	Colder zones	Average zones	Hotter zones
	■	■	■
"I"	135	150	184
"II"	*	*	*
"III"	3,82	3,93	3,22
"IV"	1,49	1,54	1,26

Magis M10 V2

Parameter	Colder zones	Average zones	Hotter zones
	■	■	■
"I"	137	150	189
"II"	*	*	*
"III"	3,34	3,43	3,04
"IV"	1,31	1,34	1,19

Magis M12 V2

Parameter	Colder zones	Average zones	Hotter zones
	■	■	■
"I"	127	142	175
"II"	*	*	*
"III"	2,47	2,23	2,16
"IV"	0,97	0,87	0,84

Magis M12 T V2

Parameter	Colder zones	Average zones	Hotter zones
	■	■	■
"I"	127	142	175
"II"	*	*	*
"III"	2,47	2,23	2,16
"IV"	0,97	0,87	0,84

Magis M16 V2

Parameter	Colder zones	Average zones	Hotter zones
	■	■	■
"I"	128	141	182
"II"	*	*	*
"III"	1,92	1,86	1,79
"IV"	0,75	0,73	0,7

Magis M16 T V2

Parameter	Colder zones	Average zones	Hotter zones
	■	■	■
"I"	128	141	182
"II"	*	*	*
"III"	1,92	1,86	1,79
"IV"	0,75	0,73	0,7

** to be determined according to Regulation 811/2013 and transient calculation methods as per Notice of the European Community no. 207/2014.*

Room central heating seasonal energy efficiency of the heat pump ____ %

Temperature control
From temperature control board

Class I = 1 %, Class II = 2 %,
Class III = 1.5 %, Class IV = 2 %,
Class V = 3 %, Class VI = 4 %,
Class VII = 3.5 %, Class VIII = 5 %

+ ____ %

Supplementary boiler
From boiler board

Seasonal central heating energy efficiency of the room (%)

(____ - _____) x _____ = - ____ %

Solar contribution

From the board of the solar device

Dimensions of the manifold (in m^2) | Volume of the tank (in m^3) | Efficiency of the manifold (in %) | Classification of the tank A* = 0.95, A = 0.91, B = 0.86, C = 0.83, D-G = 0.81

(___ x ____ + ____ x ____) x 0.45 x (____ / 100) x ____ = + ____ %

Room central heating seasonal energy efficiency of the assemble in average climate conditions ____ %

Room central heating seasonal energy efficiency class of the assemble in average climate conditions

G	F	E	D	C	B	A	A+	A++	A+++
< 30 %	≥ 30 %	≥ 34 %	≥ 36 %	≥ 75 %	≥ 82 %	≥ 90 %	≥ 98 %	≥ 125 %	≥ 150 %

Room central heating seasonal energy efficiency in colder and hotter climate conditions

Colder: ____ - __ = ____ %

Hotter: ____ + ___ = ____ %

The energy efficiency of the set of products indicated in this sheet may not reflect the actual energy efficiency after installation since such efficiency is affected by additional factors, such as the heat loss in the distribution system and the size of the products compared to the size and features of the building.

191

Immergas S.p.A.
42041 Brescello (RE) - Italy
Tel. 0522.689011
immergas.com

Cod. 1.052873ENG - rev. ST.010051/000 - 04/26

For Technical help or for Service in the **United Kingdom (GB)** call ...
ALPHA HELPLINE Tel: 0344 871 8764
website: www.alpha-innovation.co.uk

Alpha
HEATING INNOVATION

Nepicar House, London Road,
Wrotham Heath, Sevenoaks,
Kent TN15 7RS

This instruction booklet is made of ecological paper.

